Jan. 2010

SERVICE MANUAL ADDENDUM

IC-80AD IC-E80D

CONTENTS

PARTS LIST 1
BOARD LAYOUTS 12
VOLTAGE DIAGRAM 14

PARTS LIST

[RF UNIT]

REF NO.	PARTS NO.	DESCRIPTION	M.	H/V LOCATION
IC100	1110006870	S.IC UPC2709TB-E3	T	34/14.3
IC150	1110006380	S.IC LM2904PWR	T	43.8/34.7
IC151	1130013240	S.IC TC75S51FU(TE85L,F)	B	45.2/18
IC152	1190001830	S.IC BH2220FVM-TR	T	15.7/31.8
IC800	1130011671	S.IC MB15E03SLPFV1-G-ER-6E1	T	20.1/25.8
IC900	1110005230	S.IC UPC2757TB-E3	B	14.9/9.6
IC951	1130011760	S.IC CD4094BPWR	B	6.8/8.9
IC952	1110006380	S.IC LM2904PWR	T	8.5/28.8
Q2	1590002010	S.TRA XP1114(TX)	T	30.5/32.5
Q3	1590003281	S.TRA UNR9211G0L	T	29.7/27.3
Q4	1590003281	S.TRA UNR9211G0L	T	29.7/29.3
Q50	1590003281	S.TRA UNR9211G0L	B	33.6/36.7
Q100	1560001151	S.FET 2SK3476(TE12L,Q)	T	39/27.7
Q101	1560001161	S.FET 2SK3475(TE12L,F)	T	46.6/20.4
Q102	1530000371	S.TRA 2SC3356-T1B S (R25)	T	41.4/17.3
Q200	1530002601	S.TRA 2SC4215-O(TE85R,F)	B	12.5/36.1
Q250	1530003260	S.TRA 2SC5006-T1	B	10.4/26.6
Q251	1590002380	S.TRA XP1115(TX)	T	8.9/7.2
Q252	1590003251	S.TRA UNR9115G0L	T	3.3/8.2
Q300	1530003260	S.TRA 2SC5006-T1	T	10.4/37
Q301	1530003260	S.TRA 2SC5006-T1	T	2.9/29
Q302	1590003251	S.TRA UNR9115G0L	B	28.9/11.5
Q303	1590002380	S.TRA XP1115(TX)	T	6.9/10.1
Q304	1590003251	S.TRA UNR9115G0L	T	3.8/10.5
Q400	1580000790	S.FET 3SK318YB-TL-E	B	19.1/38.5
Q401	1530003260	S.TRA 2SC5006-T1	B	17.2/31.4
Q451	1590002380	S.TRA XP1115(TX)	B	24.7/6.1
Q500	1530003560	S.TRA 2SC5195-T1	B	29.3/23.9
Q501	1530003560	S.TRA 2SC5195-T1	B	32.2/15.7
Q600	1580000790	S.FET 3SK318YB-TL-E	B	21.9/28.2
Q601	1530003260	S.TRA 2SC5006-T1	B	21.9/16.6
Q700	1530003781	S.TRA 2SC5624VH-TL-E	B	3.4/26.5
Q701	1530003260	S.TRA 2SC5006-T1	B	10.3/13.8
Q703	1590003251	S.TRA UNR9115G0L	T	9.2/11.6
Q800	1590002380	S.TRA XP1115(TX)	B	35.2/8.8
Q801	1590003261	S.TRA UNR911NG0L	B	37.6/16.7
Q802	1560000541	S.FET 2SK880-Y(T5RICOM,F)	T	21.8/17.7
Q803	1590001650	S.TRA XP4601(TX)	B	39.2/14.4
Q850	1530003260	S.TRA 2SC5006-T1	T	13/9.1
Q1000	1550000220	S.FET TPCF8104(TE85L,F)	T	31.8/8.7
D9	1790001621	S.DIO 1SV308(TPL3,F)	B	24/43.9
D11	1750000531	S.DIO 1SV271(TPH3,F)	B	29.9/36.6
D50	1790000981	S.DIO MA3J7420GL	B	30.7/43.3
D51	1750000531	S.DIO 1SV271(TPH3,F)	B	27.5/41.5
D52	1750000531	S.DIO 1SV271(TPH3,F)	B	30.5/38.4
D53	1790000981	S.DIO MA3J7420GL	B	33/41.9
D54	1750000581	S.DIO 1SV307(TPH3,F)	T	30.4/38.5
D55	1750000581	S.DIO 1SV307(TPH3,F)	T	25.2/39.3
D56	1790001621	S.DIO 1SV308(TPL3,F)	B	26.2/37.3
D58	1790001621	S.DIO 1SV308(TPL3,F)	B	27.8/35.4
D59	1790000981	S.DIO MA3J7420GL	B	26.9/47.2
D60	1790000981	S.DIO MA3J7420GL	B	30.1/46.5
D61	1790001621	S.DIO 1SV308(TPL3,F)	T	30.9/44.9
D62	1790001621	S.DIO 1SV308(TPL3,F)	T	30.9/43.7
D100	1790001621	S.DIO 1SV308(TPL3,F)	T	30.5/14.1
D101	1750001620	S.DIO JDP2S04E(TPH3)	T	37.8/14.4
D102	1750001620	S.DIO JDP2S04E(TPH3)	T	39/14.4
D200	1790001621	S.DIO 1SV308(TPL3,F)	B	18.3/43.1
D201	1790001261	S.DIO MA2S077G0L	B	10.4/42.5
D202	1790001241	S.DIO MA2S7280GL	B	10.8/30.7
D203	1790001621	S.DIO 1SV308(TPL3,F)	B	12/30.7
D250	1790001261	S.DIO MA2S077G0L	B	9.2/42.5
D251	1790001261	S.DIO MA2S077G0L	B	7.9/27.3
D252	1750001270	S.VAR 1SV325(TPH3,F)	B	6.1/31.9
D253	1790001251	S.DIO MA2S1110GL	B	9/23
D254	1790001261	S.DIO MA2S077G0L	B	12.4/19.5
D255	1750001270	S.VAR 1SV325(TPH3,F)	B	11.4/21.3
D256	1790001621	S.DIO 1SV308(TPL3,F)	B	11.4/17.9
D300	1790001621	S.DIO 1SV308(TPL3,F)	T	19.9/40.7
D301	1790001261	S.DIO MA2S077G0L	T	20.3/36.8
D302	1790001621	S.DIO 1SV308(TPL3,F)	T	27.8/36.5
D303	1790001621	S.DIO 1SV308(TPL3,F)	T	21.1/35.6
D304	1790001261	S.DIO MA2S077G0L	T	14.9/36.5
D305	1750000721	S.VAR HVC375BTRF-E	T	13.1/36.4
D306	1790001261	S.DIO MA2S077G0L	T	4.4/38.3
D307	1750000721	S.VAR HVC375BTRF-E	T	3.6/37.1
D308	1750000721	S.VAR HVC375BTRF-E	T	3.8/33.9
D309	1790001261	S.DIO MA2S077G0L	T	3.2/31.6
D310	1790001241	S.DIO MA2S7280GL	T	4.1/26.3
D311	1790001621	S.DIO 1SV308(TPL3,F)	T	2.7/24.5
D400	1790001621	S.DIO 1SV308(TPL3,F)	B	20.5/41.6
D401	1750000771	S.VAR HVC376BTRF-E	B	16.9/33.8
D402	1750000771	S.VAR HVC376BTRF-E	B	16.9/27.1
D403	1750000771	S.VAR HVC376BTRF-E	B	15.6/23.4
D404	1790001241	S.DIO MA2S7280GL	B	15.1/27.3
D405	1790001621	S.DIO 1SV308(TPL3,F)	B	17.3/20.8
D500	1790001621	S.DIO 1SV308(TPL3,F)	B	29.7/33
D501	1790001261	S.DIO MA2S077G0L	B	28/31.7
D502	1750000721	S.VAR HVC375BTRF-E	B	28/27.2
D503	1790001251	S.DIO MA2S1110GL	B	31.9/17.4
D504	1790001261	S.DIO MA2S077G0L	B	27.7/24
D505	1750000721	S.VAR HVC375BTRF-E	B	28.5/20.6
D506	1750000721	S.VAR HVC375BTRF-E	B	29.4/17.6
D507	1790001261	S.DIO MA2S077G0L	B	28.2/15.5

[RF UNIT]

REF NO.	PARTS NO.	DESCRIPTION	M.	H/V LOCATION
D508	1790001621	S.DIO 1SV308(TPL3,F)	B	28.9/13.1
D509	1790001621	S.DIO 1SV308(TPL3,F)	B	14.6/12.1
D600	1790001621	S.DIO 1SV308(TPL3,F)	B	23.6/35.7
D601	1750000771	S.VAR HVC376BTRF-E	B	23.9/22.7
D602	1750000771	S.VAR HVC376BTRF-E	B	23/20.9
D603	1790001251	S.DIO MA2S1110GL	B	25.2/13.6
D604	1750000771	S.VAR HVC376BTRF-E	B	20/13.9
D605	1750000771	S.VAR HVC376BTRF-E	B	18.2/13.5
D606	1790001621	S.DIO 1SV308(TPL3,F)	B	14.9/14.9
D700	1790001621	S.DIO 1SV308(TPL3,F)	B	3.6/36.2
D701	1790001621	S.DIO 1SV308(TPL3,F)	B	2.4/32.4
D702	1750000721	S.VAR HVC375BTRF-E	B	3.2/28.9
D703	1750000721	S.VAR HVC375BTRF-E	B	7.6/21
D704	1750000721	S.VAR HVC375BTRF-E	B	8.4/18.1
D705	1790001251	S.DIO MA2S1110GL	B	6.2/24.8
D706	1790001621	S.DIO 1SV308(TPL3,F)	B	13/13.6
D707	1790001621	S.DIO 1SV308(TPL3,F)	B	13.1/15.2
D800	1790001251	S.DIO MA2S1110GL	T	24.6/27.7
D850	1790001621	S.DIO 1SV308(TPL3,F)	T	15.6/10.6
D851	1790001251	S.DIO MA2S1110GL	T	12.4/12.4
D1000	1790001241	S.DIO MA2S7280GL	T	37.9/7.8
D1001	1750001690	S.DIO RB050LA-40	T	40.1/8.7
L1	6200012660	S.COI 0.30-1.0-4TR 9.1N <COMO>	T	10.4/42.3
L2	6200012490	S.COI 0.30-0.9-6TR 13.6N <COMO>	T	12.7/41.7
L3	6200012490	S.COI 0.30-0.9-6TR 13.6N <COMO>	T	15.5/42.3
L4	6200007740	S.COI LQW2BHN47NJ03L	T	25.6/41.9
L5	6200012910	S.COI 0.35-1.6-8TL 45.5N <COMO>	T	18.7/43.4
L6	6200012900	S.COI 0.30-2.0-7TL 57.2N <COMO>	T	19.6/47.1
L7	6200012460	S.COI 0.30-1.7-8TL 54N <COMO>	T	22.8/46.5
L8	6200007921	S.COI ELJRF 15NJFB	B	3.2/40.3
L9	6200007921	S.COI ELJRF 15NJFB	B	3.2/39.4
L10	6200004480	S.COI MLF1608D R82K-T	B	24.6/41.4
L12	6200004480	S.COI MLF1608D R82K-T	T	31.3/35.7
L14	6200004480	S.COI MLF1608D R82K-T	T	31.3/46.1
L15	6200010910	S.COI LQW18AN56NG00D	B	26.7/43.1
L50	6200013090	S.COI 0.26-1.1-5TR 16N <COMO>	T	28.4/39.8
L52	6200009070	S.COI LQW18AN18NG00D (LQW1608A18NG00)	B	24.4/37.5
L53	6200009070	S.COI LQW18AN18NG00D (LQW1608A18NG00)	B	25.7/35.4
L55	6200012470	S.COI 0.30-1.7-7TL 45.3N <COMO>	T	27/45.9
L100	6200013090	S.COI 0.26-1.1-5TR 16N <COMO>	T	34.1/36.9
L101	6200012850	S.COI 0.40-0.8-2TL 2.5N <COMO>	T	33.6/33.7
L103	6200013010	S.COI 0.30-0.9-5TL 10.3N <COMO>	T	35.3/39.8
L104	6200012800	S.COI 0.40-1.5-5TL 20N <COMO>	T	36.1/22.6
L105	6200008031	S.COI ELJRF 1N8DFB	T	42.6/23.9
L106	6200007961	S.COI ELJRF 6N8JFB (6.8)	T	46/24.8
L107	6200008570	S.COI LQW2BHN6N8D03L	T	41/21.5
L108	6200007921	S.COI ELJRF 15NJFB	T	48.2/17
L109	6200011650	S.COI LQW18AN68NG00D	T	43.9/17
L111	6200011031	S.COI ELJRF R10JFB	T	35.9/13.9
L200	6200006981	S.COI ELJRE R10GFA	B	15.8/43.1
L201	6200009571	S.COI ELJRE R12GFA	B	13.2/43.1
L202	6200005140	S.COI MLF1608D R33K-T	B	11.4/40.7
L203	6200005140	S.COI MLF1608D R33K-T	B	12.3/38.8
L204	6200002041	S.COI NLV25T-101J	B	11.6/33.1
L250	6200004470	S.COI MLF1608D R12K-T	B	9/30.3
L251	6200004590	S.COI MLF1608D R18K-T	B	8.6/29.1
L252	6200003960	S.COI MLF1608A 1R0K-T	B	10.1/24.8
L253	6200004600	S.COI MLF1608D R15K-T	B	11.4/22.5
L254	6200004600	S.COI MLF1608D R15K-T	B	12.7/23.7
L300	6200011001	S.COI ELJRF 56NJFB	T	18.6/39.4
L301	6200011021	S.COI ELJRF 82NJFB	T	18.6/37.8
L302	6200010991	S.COI ELJRF 47NJFB	T	26.4/36.4
L303	6200007871	S.COI ELJRF 39NJFB	T	26.4/35.5
L304	6200007881	S.COI ELJRF 33NJFB	T	18.1/36.6
L305	6200009571	S.COI ELJRE R12GFA	T	16.7/37.4
L306	6200006981	S.COI ELJRE R10GFA	T	7.8/36.7
L307	6200011001	S.COI ELJRF 56NJFB	T	8.8/37.7
L308	6200011001	S.COI ELJRF 56NJFB	T	4.2/32.8
L309	6200009101	S.COI ELJRE R18GFA	T	2.1/32.8
L310	6200011031	S.COI ELJRF R10JFB	T	2.6/27.5
L400	6200013400	S.COI LQW15ANR12J00D	B	21.9/36.4
L401	6200009250	S.COI LQW18ANR22G00D (LQW1608AR22G00)	B	17.4/36.6
L402	6200011670	S.COI LQW18AN82NG00D	B	14.8/33.8
L403	6200011670	S.COI LQW18AN82NG00D	B	17.5/29.7
L404	6200011650	S.COI LQW18AN68NG00D	B	15.6/24.6
L405	6200011660	S.COI LQW18ANR15G00D	B	22.6/38.9
L500	6200007971	S.COI ELJRF 5N6DFB	B	28.8/28.5
L501	6200007921	S.COI ELJRF 15NJFB	B	28.7/30.6
L502	6200007951	S.COI ELJRF 8N2JFB (8.2)	B	29.3/21.9
L503	6200007921	S.COI ELJRF 15NJFB	B	30.5/21.3
L504	6200007961	S.COI ELJRF 6N8JFB (6.8)	B	28.7/16.5
L505	6200007921	S.COI ELJRF 15NJFB	B	27.1/16.5
L506	6200007901	S.COI ELJRF 22NJFB	B	31.4/13.8
L508	6200011031	S.COI ELJRF R10JFB	B	28.4/32.7
L600	6200010850	S.COI LQW18AN22NG00D (LQW1608A22NG00)	B	24/31
L601	6200010910	S.COI LQW18AN56NG00D	B	21.2/30.9
L602	6200011590	S.COI LQW18AN39NG00D	B	21.2/25.4
L603	6200009220	S.COI LQW18AN15NG00D (LQW1608A15NG00)	B	23.9/23.9
L604	6200009220	S.COI LQW18AN15NG00D (LQW1608A15NG00)	B	23.1/19.7

M.=Mounted side (T: Mounted on the Top side, B: Mounted on the Bottom side)
S.=Surface mount

[RF UNIT]

REF NO.	PARTS NO.	DESCRIPTION	M.	H/V LOCATION
L605	6200009290	S.COI LQW18AN47NG00D (LQW1608A47NG00)	B	20.2/16.9
L606	6200009220	S.COI LQW18AN15NG00D (LQW1608A15NG00)	B	20/15.1
L607	6200009220	S.COI LQW18AN15NG00D (LQW1608A15NG00)	B	17/13.5
L608	6200009280	S.COI LQW18AN27NG00D (LQW1608A27NG00)	B	24.4/32.9
L610	6200005180	S.COI MLF1608D R39K-T	B	21.2/33.5
L700	6200008001	S.COI ELJRF 3N3DFB (3.3)	B	2.1/30.8
L701	6200011031	S.COI ELJRF R10JFB	B	5.1/25.3
L702	6200008001	S.COI ELJRF 3N3DFB (3.3)	B	5.6/21.6
L703	6200008001	S.COI ELJRF 3N3DFB (3.3)	B	8.7/17.1
L704	6200007941	S.COI ELJRF 10NJFB	B	10.3/12.2
L850	6200007941	S.COI ELJRF 10NJFB	T	14.3/9.9
L851	6200007981	S.COI ELJRF 4N7DFB (4.7)	T	14.3/7.4
L900	6200011031	S.COI ELJRF R10JFB	T	22.5/4
L901	6200009351	S.COI ELJRE R22GFA	B	16.9/9.7
R1	7030007270	S.RES ERJ2GEJ 151 X (150)	B	30/41.2
R3	7030004980	S.RES ERJ2GEJ 101 X (100)	T	29.9/34.4
R4	7030005120	S.RES ERJ2GEJ 102 X (1K)	T	28.5/33.6
R5	7030004980	S.RES ERJ2GEJ 101 X (100)	T	31.3/47.1
R6	7030005120	S.RES ERJ2GEJ 102 X (1K)	T	28.8/31.2
R7	7030007300	S.RES ERJ2GEJ 332 X (3.3K)	B	28.4/33.6
R8	7030007290	S.RES ERJ2GEJ 222 X (2.2K)	B	31/34.3
R9	7030007300	S.RES ERJ2GEJ 332 X (3.3K)	B	22.9/43.5
R10	7030005080	S.RES ERJ2GEJ 823 X (82K)	T	4.9/39.6
R14	7030007270	S.RES ERJ2GEJ 151 X (150)	B	24.3/39.6
R15	7030007270	S.RES ERJ2GEJ 151 X (150)	B	32/37
R41	7030007290	S.RES ERJ2GEJ 222 X (2.2K)	B	18.7/44.2
R50	7030005240	S.RES ERJ2GEJ 473 X (47K)	B	32.5/44.5
R51	7030005040	S.RES ERJ2GEJ 472 X (4.7K)	B	35.3/43.6
R52	7030009280	S.RES ERJ2GEJ 391 X	B	33.7/38.2
R53	7030005240	S.RES ERJ2GEJ 473 X (47K)	B	34.9/42.4
R58	7030005240	S.RES ERJ2GEJ 473 X (47K)	B	32.1/46.7
R59	7030005240	S.RES ERJ2GEJ 473 X (47K)	B	32.1/45.7
R100	7030007250	S.RES ERJ2GEJ 220 X (22)	T	45.3/30.1
R101	7030007340	S.RES ERJ2GEJ 153 X (15K)	T	45.3/31
R102	7030004980	S.RES ERJ2GEJ 101 X (100)	T	49.1/31.9
R103	7030004980	S.RES ERJ2GEJ 101 X (100)	T	43/21
R104	7030009200	S.RES ERJ2GEJ 390 X (39)	B	48.3/19.7
R105	7030005240	S.RES ERJ2GEJ 473 X (47K)	B	48.3/22.4
R106	7030009280	S.RES ERJ2GEJ 391 X	B	47.9/18.5
R108	7030005210	S.RES ERJ2GEJ 822 X (8.2K)	T	40.5/14.9
R109	7030007300	S.RES ERJ2GEJ 332 X (3.3K)	T	39.2/18.1
R111	7030005120	S.RES ERJ2GEJ 102 X (1K)	T	40.2/13.3
R113	7030005580	S.RES ERJ2GEJ 560 X (56)	T	43.7/15.3
R114	7030005580	S.RES ERJ2GEJ 560 X (56)	T	44.9/15.4
R115	7030005120	S.RES ERJ2GEJ 102 X (1K)	T	37.4/11.8
R116	7030005120	S.RES ERJ2GEJ 102 X (1K)	T	38.3/17.4
R118	7030004980	S.RES ERJ2GEJ 101 X (100)	T	31.1/13
R119	7030007290	S.RES ERJ2GEJ 222 X (2.2K)	T	31.1/12.1
R120	7030010040	S.RES ERJ2GEJ-JPW	T	36.8/15.8
R146	7030005220	S.RES ERJ2GEJ 223 X (22K)	B	43.5/19.4
R147	7030005060	S.RES ERJ2GEJ 333 X (33K)	B	44.7/21.1
R148	7030005230	S.RES ERJ2GEJ 334 X (330K)	B	45.8/21.1
R149	7030005160	S.RES ERJ2GEJ 105 X (1M)	B	47/18.5
R150	7030005050	S.RES ERJ2GEJ 103 X (10K)	T	39.1/36
R151	7030008310	S.RES ERJ2GEJ 564 X (560K)	T	39.5/34.7
R152	7030007300	S.RES ERJ2GEJ 332 X (3.3K)	T	49.1/33.5
R153	7030004980	S.RES ERJ2GEJ 101 X (100)	T	43.6/32.3
R154	7030007290	S.RES ERJ2GEJ 222 X (2.2K)	T	37.4/12.7
R155	7030005160	S.RES ERJ2GEJ 105 X (1M)	T	49.1/35.1
R156	7030005230	S.RES ERJ2GEJ 334 X (330K)	T	49.1/36.7
R157	7030007340	S.RES ERJ2GEJ 153 X (15K)	T	40.8/37
R158	7030005060	S.RES ERJ2GEJ 333 X (33K)	T	48.2/36.7
R159	7030005220	S.RES ERJ2GEJ 223 X (22K)	T	47/36.5
R160	7030007340	S.RES ERJ2GEJ 153 X (15K)	T	42/37.5
R161	7510001770	S.THE NTCG10 4LH 473JT	B	47.5/30.6
R162	7030005220	S.RES ERJ2GEJ 223 X (22K)	B	48.7/31
R163	7030007290	S.RES ERJ2GEJ 222 X (2.2K)	T	37.7/10.6
R200	7030007290	S.RES ERJ2GEJ 222 X (2.2K)	B	9.2/32.8
R201	7030005240	S.RES ERJ2GEJ 473 X (47K)	B	10.8/35.1
R202	7030005050	S.RES ERJ2GEJ 103 X (10K)	B	10.8/36.7
R203	7030005010	S.RES ERJ2GEJ 681 X (680)	B	14.5/37.6
R250	7030007290	S.RES ERJ2GEJ 222 X (2.2K)	B	7.2/32.2
R251	7030005040	S.RES ERJ2GEJ 472 X (4.7K)	B	7.5/25.7
R252	7030005240	S.RES ERJ2GEJ 473 X (47K)	B	5/32.9
R253	7030005220	S.RES ERJ2GEJ 223 X (22K)	B	9/27.8
R254	7030005050	S.RES ERJ2GEJ 103 X (10K)	B	9/26.2
R255	7030007280	S.RES ERJ2GEJ 331 X (330)	B	11.5/29.1
R256	7030005050	S.RES ERJ2GEJ 103 X (10K)	B	12.4/17.5
R257	7030005240	S.RES ERJ2GEJ 473 X (47K)	B	13.1/22.4
R258	7030007290	S.RES ERJ2GEJ 222 X (2.2K)	B	10/20.1
R259	7030005050	S.RES ERJ2GEJ 103 X (10K)	B	13.6/18.1
R300	7030007290	S.RES ERJ2GEJ 222 X (2.2K)	T	17.9/40.7
R301	7030007290	S.RES ERJ2GEJ 222 X (2.2K)	T	24.6/37.9
R302	7030005120	S.RES ERJ2GEJ 102 X (1K)	T	23.4/36.7
R303	7030007290	S.RES ERJ2GEJ 222 X (2.2K)	T	21.9/37.2
R304	7030005050	S.RES ERJ2GEJ 103 X (10K)	T	8.5/38.9
R305	7030005240	S.RES ERJ2GEJ 473 X (47K)	T	15.2/38.5
R306	7030005050	S.RES ERJ2GEJ 103 X (10K)	T	9.2/35.5
R307	7030005050	S.RES ERJ2GEJ 103 X (10K)	T	10.8/35.5
R308	7030008370	S.RES ERJ2GEJ 561 X (560)	T	10.6/38.8
R309	7030008410	S.RES ERJ2GEJ 392 X (3.9K)	T	6.4/38.5
R310	7030008410	S.RES ERJ2GEJ 392 X (3.9K)	T	2.7/39.6
R311	7030005240	S.RES ERJ2GEJ 473 X (47K)	T	5.2/36.8
R312	7030005240	S.RES ERJ2GEJ 473 X (47K)	T	3.6/34.9
R313	7030005050	S.RES ERJ2GEJ 103 X (10K)	T	1.5/34.2
R314	7030005220	S.RES ERJ2GEJ 223 X (22K)	T	4.2/28
R315	7030005530	S.RES ERJ2GEJ 100 X (10)	T	1.2/27.7
R316	7030009280	S.RES ERJ2GEJ 391 X	T	1.2/30.7
R317	7030007290	S.RES ERJ2GEJ 222 X (2.2K)	T	2.1/26.3

[RF UNIT]

REF NO.	PARTS NO.	DESCRIPTION	M.	H/V LOCATION
R318	7030007290	S.RES ERJ2GEJ 222 X (2.2K)	T	15.6/39.8
R321	7030005720	S.RES ERJ2GEJ 563 X (56K)	T	12.4/38.8
R322	7030005720	S.RES ERJ2GEJ 563 X (56K)	T	4.4/29.2
R323	7030005050	S.RES ERJ2GEJ 103 X (10K)	B	8.2/40
R325	7030005050	S.RES ERJ2GEJ 103 X (10K)	B	26.3/22.8
R400	7030007300	S.RES ERJ2GEJ 332 X (3.3K)	B	19.2/42.1
R401	7030008300	S.RES ERJ2GEJ 184 X (180K)	B	19.2/40.3
R402	7030005110	S.RES ERJ2GEJ 224 X (220K)	B	20.9/36.4
R403	7030005240	S.RES ERJ2GEJ 473 X (47K)	B	19.2/41.2
R404	7030005110	S.RES ERJ2GEJ 224 X (220K)	B	20/36.5
R405	7030005120	S.RES ERJ2GEJ 102 X (1K)	B	16.9/35.6
R406	7030004980	S.RES ERJ2GEJ 101 X (100)	B	18/41.2
R409	7030004990	S.RES ERJ2GEJ 221 X (220)	B	18.3/33.9
R411	7030005240	S.RES ERJ2GEJ 473 X (47K)	B	15.7/35.6
R414	7030007350	S.RES ERJ2GEJ 393 X (39K)	B	15.2/29
R415	7030005040	S.RES ERJ2GEJ 472 X (4.7K)	B	15.7/30.2
R417	7030005120	S.RES ERJ2GEJ 102 X (1K)	B	16.9/28.2
R418	7030004990	S.RES ERJ2GEJ 221 X (220)	B	13.5/30.9
R419	7030005090	S.RES ERJ2GEJ 104 X (100K)	B	15.8/25.7
R420	7030005530	S.RES ERJ2GEJ 100 X (10)	B	13.8/26.4
R421	7030005240	S.RES ERJ2GEJ 473 X (47K)	B	16.2/21.2
R422	7030005240	S.RES ERJ2GEJ 473 X (47K)	B	15.3/21.2
R423	7030009270	S.RES ERJ2GEJ 821 X (820)	B	17.5/22.4
R459	7030005120	S.RES ERJ2GEJ 102 X (1K)	T	19.8/30.5
R501	7030005050	S.RES ERJ2GEJ 103 X (10K)	B	26.8/33.6
R502	7030005240	S.RES ERJ2GEJ 473 X (47K)	B	27.6/26.1
R503	7030005060	S.RES ERJ2GEJ 333 X (33K)	B	31.7/22.5
R504	7030005050	S.RES ERJ2GEJ 103 X (10K)	B	30.8/23.4
R506	7030004990	S.RES ERJ2GEJ 221 X (220)	B	30.3/26.3
R507	7030008410	S.RES ERJ2GEJ 392 X (3.9K)	B	26.4/24.8
R508	7030008410	S.RES ERJ2GEJ 392 X (3.9K)	B	27.5/21.9
R509	7030005240	S.RES ERJ2GEJ 473 X (47K)	B	29.8/19.5
R510	7030005240	S.RES ERJ2GEJ 473 X (47K)	B	29.2/18.6
R511	7030005050	S.RES ERJ2GEJ 103 X (10K)	B	27.3/13.2
R512	7030005720	S.RES ERJ2GEJ 563 X (56K)	B	30.8/15.6
R513	7030005530	S.RES ERJ2GEJ 100 X (10)	B	32.4/12.2
R514	7030004990	S.RES ERJ2GEJ 221 X (220)	B	34/16.4
R515	7030007290	S.RES ERJ2GEJ 222 X (2.2K)	B	31/12.6
R516	7030005240	S.RES ERJ2GEJ 473 X (47K)	B	15.7/11.7
R519	7030008280	S.RES ERJ2GEJ 271 X (270)	B	32.4/13.8
R602	7030008300	S.RES ERJ2GEJ 184 X (180K)	B	19.9/30.9
R603	7030005110	S.RES ERJ2GEJ 224 X (220K)	B	19.9/30
R604	7030005240	S.RES ERJ2GEJ 473 X (47K)	B	22.3/30.4
R605	7030005110	S.RES ERJ2GEJ 224 X (220K)	B	23.9/30
R607	7030004980	S.RES ERJ2GEJ 101 X (100)	B	19.9/27.3
R608	7030005030	S.RES ERJ2GEJ 152 X (1.5K)	B	21.5/26.4
R610	7030004970	S.RES ERJ2GEJ 470 X (47)	B	23.8/25.2
R612	7030005240	S.RES ERJ2GEJ 473 X (47K)	B	20.1/23.2
R613	7030005240	S.RES ERJ2GEJ 473 X (47K)	B	21/22.3
R616	7030005220	S.RES ERJ2GEJ 223 X (22K)	B	23.8/14.2
R617	7030005220	S.RES ERJ2GEJ 223 X (22K)	B	23.7/15.4
R619	7030005120	S.RES ERJ2GEJ 102 X (1K)	B	18.3/17.1
R620	7030004990	S.RES ERJ2GEJ 221 X (220)	B	20.5/19
R621	7030005530	S.RES ERJ2GEJ 100 X (10)	B	17.1/17
R622	7030005240	S.RES ERJ2GEJ 473 X (47K)	B	20.9/11.6
R623	7030005240	S.RES ERJ2GEJ 473 X (47K)	B	19.7/10.6
R624	7030009270	S.RES ERJ2GEJ 821 X (820)	B	16.3/16.1
R700	7030007290	S.RES ERJ2GEJ 222 X (2.2K)	B	2.9/34.5
R701	7030007290	S.RES ERJ2GEJ 222 X (2.2K)	B	2.5/36.6
R702	7030005120	S.RES ERJ2GEJ 102 X (1K)	B	2.9/33.4
R703	7030008290	S.RES ERJ2GEJ 183 X (18K)	B	5.6/26.5
R704	7030008290	S.RES ERJ2GEJ 183 X (18K)	B	5.6/27.4
R705	7030004970	S.RES ERJ2GEJ 470 X (47)	B	7.9/22.5
R706	7030007250	S.RES ERJ2GEJ 220 X (22)	B	5.1/23.7
R707	7030005240	S.RES ERJ2GEJ 473 X (47K)	B	2/29.9
R708	7030005240	S.RES ERJ2GEJ 473 X (47K)	B	6.6/17
R709	7030005240	S.RES ERJ2GEJ 473 X (47K)	B	5.7/17
R710	7030007250	S.RES ERJ2GEJ 220 X (22)	B	10.3/15.3
R711	7030005220	S.RES ERJ2GEJ 223 X (22K)	B	9.1/15.9
R712	7030007280	S.RES ERJ2GEJ 331 X (330)	B	9.1/12.5
R713	7030004990	S.RES ERJ2GEJ 221 X (220)	B	8.6/14.6
R714	7030007290	S.RES ERJ2GEJ 222 X (2.2K)	B	11.9/12.1
R715	7030005240	S.RES ERJ2GEJ 473 X (47K)	B	12.7/16.3
R800	7030005220	S.RES ERJ2GEJ 223 X (22K)	T	23.1/21.5
R802	7030005120	S.RES ERJ2GEJ 102 X (1K)	T	20.7/30.5
R803	7030005120	S.RES ERJ2GEJ 102 X (1K)	T	21.6/30.5
R804	7030005120	S.RES ERJ2GEJ 102 X (1K)	T	22.5/30.5
R805	7030005120	S.RES ERJ2GEJ 102 X (1K)	T	24.5/24
R806	7030010040	S.RES ERJ2GEJ-JPW	T	9.5/18.5
R807	7030009190	S.RES RR0510P-332-D (3.3K)	T	11.2/22.9
R808	7030005990	S.RES RR0510P-122-D (1.2K)	T	9.5/19.4
R810	7030010040	S.RES ERJ2GEJ-JPW	T	24.1/26.1
R818	7030004980	S.RES ERJ2GEJ 101 X (100)	T	24.6/16.3
R820	7030005050	S.RES ERJ2GEJ 103 X (10K)	T	19.6/18.4
R821	7030005720	S.RES ERJ2GEJ 563 X (56K)	T	22.4/16
R822	7030005080	S.RES ERJ2GEJ 823 X (82K)	T	21.2/15.7
R824	7030005030	S.RES ERJ2GEJ 152 X (1.5K)	B	41.5/15.6
R825	7030005050	S.RES ERJ2GEJ 103 X (10K)	B	41.5/14.7
R826	7030000010	S.RES MCR10EZHJ JPW (000)	T	15.1/22.7
R850	7030005530	S.RES ERJ2GEJ 100 X (10) [EUR]	T	13.7/11.1
	7030005530	S.RES ERJ2GEJ 100 X (10) [UK]		
	7030005530	S.RES ERJ2GEJ 100 X (10) [ITR]		
	7030004970	S.RES ERJ2GEJ 470 X (47) [USA]		
	7030005530	S.RES ERJ2GEJ 100 X (10) [FRA]		
	7030004970	S.RES ERJ2GEJ 470 X (47) [SEA]		
	7030004970	S.RES ERJ2GEJ 470 X (47) [CHN]		
	7030004970	S.RES ERJ2GEJ 470 X (47) [KOR]		
	7030004970	S.RES ERJ2GEJ 470 X (47) [AUS]		
	7030004970	S.RES ERJ2GEJ 470 X (47) [EXP]		

M.=Mounted side (T: Mounted on the Top side, B: Mounted on the Bottom side)
S.=Surface mount

[RF UNIT]

REF NO.	PARTS NO.	DESCRIPTION			M.	H/V LOCATION
R851	7030005090	S.RES	ERJ2GEJ 104 X (100K)	[EUR]	T	12.8/10.8
	7030005090	S.RES	ERJ2GEJ 104 X (100K)	[UK]		
	7030005090	S.RES	ERJ2GEJ 104 X (100K)	[ITR]		
	7030005070	S.RES	ERJ2GEJ 683 X (68K)	[USA]		
	7030005090	S.RES	ERJ2GEJ 104 X (100K)	[FRA]		
	7030005070	S.RES	ERJ2GEJ 683 X (68K)	[SEA]		
	7030005070	S.RES	ERJ2GEJ 683 X (68K)	[CHN]		
	7030005070	S.RES	ERJ2GEJ 683 X (68K)	[KOR]		
	7030005070	S.RES	ERJ2GEJ 683 X (68K)	[AUS]		
	7030005070	S.RES	ERJ2GEJ 683 X (68K)	[EXP]		
R852	7030007570	S.RES	ERJ2GEJ 122 X (1.2K)		T	14.5/12.3
R853	7030007290	S.RES	ERJ2GEJ 222 X (2.2K)		T	16.1/12.3
R854	7030007300	S.RES	ERJ2GEJ 332 X (3.3K)		T	15.8/7
R855	7030007290	S.RES	ERJ2GEJ 222 X (2.2K)		T	15.8/5.3
R900	7030007290	S.RES	ERJ2GEJ 222 X (2.2K)		B	13/10
R950	7030005090	S.RES	ERJ2GEJ 104 X (100K)		T	9.1/33
R951	7030005100	S.RES	ERJ2GEJ 154 X (150K)		T	7.5/33
R952	7030007270	S.RES	ERJ2GEJ 151 X (150)		T	12/31.9
R953	7030005090	S.RES	ERJ2GEJ 104 X (100K)		T	10.8/27.2
R954	7030005100	S.RES	ERJ2GEJ 154 X (150K)		T	7.4/24.5
R955	7030007270	S.RES	ERJ2GEJ 151 X (150)		T	10.8/28.8
R1001	7030005090	S.RES	ERJ2GEJ 104 X (100K)		T	32.8/6.5
R1002	7030011870	S.RES	ERJ2BSFR18X (0.18)		B	38.4/18.8
R1003	7030011870	S.RES	ERJ2BSFR18X (0.18)		B	38.4/19.7
R1004	7030011870	S.RES	ERJ2BSFR18X (0.18)		B	38.4/20.6
C1	4030017570	S.CER	ECJ0EC1H040B		T	10.1/43.8
C2	4030017570	S.CER	ECJ0EC1H040B		T	11.3/44.1
C3	4030017350	S.CER	ECJ0EC1H020B		T	14.5/40.7
C4	4030017580	S.CER	ECJ0EC1H060C		T	12.2/44.1
C5	4030017550	S.CER	ECJ0EC1H1R5B		T	16.1/40.7
C6	4030017340	S.CER	ECJ0EC1H010B		T	16.3/43.8
C7	4030017400	S.CER	ECJ0EC1H220J		T	21.8/41.5
C8	4030017410	S.CER	ECJ0EC1H240J		T	23.4/41.6
C9	4030017390	S.CER	ECJ0EC1H180J		T	22.8/40.5
C10	4030017550	S.CER	ECJ0EC1H1R5B		T	20.6/42.3
C11	4030017660	S.CER	ECJ0EC1H330J		T	21.8/42.4
C12	4030017380	S.CER	ECJ0EC1H050B		T	20.6/43.9
C13	4030017400	S.CER	ECJ0EC1H220J		T	21.8/43.3
C14	4030017550	S.CER	ECJ0EC1H1R5B		T	21.8/44.2
C17	4030017340	S.CER	ECJ0EC1H010B		B	5.3/39.2
C18	4030017550	S.CER	ECJ0EC1H1R5B		B	4.8/40.1
C19	4030017550	S.CER	ECJ0EC1H1R5B		B	4.2/38.2
C20	4030017380	S.CER	ECJ0EC1H050B		B	3.3/38.2
C23	4030016790	S.CER	ECJ0EB1C103K		B	28.6/39.9
C26	4030017460	S.CER	ECJ0EB1E102K		T	28.3/34.5
C27	4030017460	S.CER	ECJ0EB1E102K		T	28.2/27.4
C32	4030017460	S.CER	ECJ0EB1E102K		B	29.1/34.6
C34	4030017460	S.CER	ECJ0EB1E102K		T	28.5/32.7
C36	4030017460	S.CER	ECJ0EB1E102K		T	28.2/29.5
C37	4030017400	S.CER	ECJ0EC1H220J		B	28.4/43.5
C38	4030017390	S.CER	ECJ0EC1H180J		B	25/43.5
C41	4030018860	S.CER	ECJ0EB0J105K		B	21.7/43.1
C43	4030017330	S.CER	ECJ0EF1C104Z		T	24.7/46.1
C44	4030017460	S.CER	ECJ0EB1E102K		T	29.8/35.3
C45	4030017460	S.CER	ECJ0EB1E102K		T	30.1/47.4
C46	4030016790	S.CER	ECJ0EB1C103K		B	26.4/40.1
C47	4030017460	S.CER	ECJ0EB1E102K		B	25.2/39.6
C48	4030017460	S.CER	ECJ0EB1E102K		B	31.7/33.2
C49	4030017460	S.CER	ECJ0EB1E102K		B	21.8/44.5
C50	4030017340	S.CER	ECJ0EC1H010B		T	28.7/42.1
C51	4030017460	S.CER	ECJ0EB1E102K		B	33.7/43.6
C52	4030017600	S.CER	ECJ0EC1H080C		T	27.5/42.1
C54	4030017590	S.CER	ECJ0EC1H070C		T	30.3/41
C55	4030017440	S.CER	ECJ0EC1H221J		B	31/35.2
C56	4030017460	S.CER	ECJ0EB1E102K		B	34/35.3
C57	4030017460	S.CER	ECJ0EB1E102K		B	30.4/40
C58	4030017440	S.CER	ECJ0EC1H221J		B	33.7/39.1
C59	4030017340	S.CER	ECJ0EC1H010B		T	31.4/40.5
C62	4030017380	S.CER	ECJ0EC1H050B		B	26.4/39.2
C63	4030017600	S.CER	ECJ0EC1H080C		B	25.8/38.3
C65	4030017570	S.CER	ECJ0EC1H040B		B	26.7/35.4
C66	4030017340	S.CER	ECJ0EC1H010B		T	25.9/47.8
C67	4030017630	S.CER	ECJ0EC1H120J		T	24.7/44.5
C68	4030017640	S.CER	ECJ0EC1H150J		T	28.3/43.7
C69	4030017340	S.CER	ECJ0EC1H010B		T	28.3/47.8
C70	4030017460	S.CER	ECJ0EB1E102K		B	27.4/45.1
C71	4030017460	S.CER	ECJ0EB1E102K		B	28.3/45.1
C72	4030017330	S.CER	ECJ0EF1C104Z		T	29.2/44.9
C100	4030017430	S.CER	ECJ0EC1H101J		T	32.3/37.7
C101	4030017610	S.CER	ECJ0EC1H090C	[EUR]	T	33.8/35.2
	4030017610	S.CER	ECJ0EC1H090C	[UK]		
	4030017610	S.CER	ECJ0EC1H090C	[ITR]		
	4030017620	S.CER	ECJ0EC1H100C	[USA]		
	4030017610	S.CER	ECJ0EC1H090C	[FRA]		
	4030017610	S.CER	ECJ0EC1H090C	[SEA]		
	4030017610	S.CER	ECJ0EC1H090C	[CHN]		
	4030017610	S.CER	ECJ0EC1H090C	[KOR]		
	4030017610	S.CER	ECJ0EC1H090C	[AUS]		
	4030017610	S.CER	ECJ0EC1H090C	[EXP]		
C102	4030011530	S.CER	C1608 CH 1H 110J-T		T	35.9/34
C103	4030007030	S.CER	C1608 CH 1H 150J-T		T	35.9/35.2
C104	4030007080	S.CER	C1608 CH 1H 390J-T		T	37.4/32.8
C106	4030011540	S.CER	C1608 CH 1H 750J-T		T	33.6/41.2
C108	4030017460	S.CER	ECJ0EB1E102K		T	32.5/42.9
C109	4550007650	S.TAN	F931V105MAABMA		T	33.7/23.1
C111	4030017460	S.CER	ECJ0EB1E102K		T	32.3/20.1
C112	4030017500	S.CER	ECJ0EC1H560J		T	44.1/24.9
C114	4030017680	S.CER	ECJ0EC1H820J		T	48.1/24.8
C117	4030017460	S.CER	ECJ0EB1E102K		T	41/19.7
C119	4030017460	S.CER	ECJ0EB1E102K		T	48.2/30.2
C121	4030017460	S.CER	ECJ0EB1E102K		T	45.8/17
C122	4030017460	S.CER	ECJ0EB1E102K		T	41.4/14.9
C123	4030017330	S.CER	ECJ0EF1C104Z		T	42.3/14.9

[RF UNIT]

REF NO.	PARTS NO.	DESCRIPTION			M.	H/V LOCATION
C124	4030017460	S.CER	ECJ0EB1E102K		T	39.2/16.5
C125	4030017430	S.CER	ECJ0EC1H101J		T	35.9/15.5
C126	4030017460	S.CER	ECJ0EB1E102K		T	34.3/12.5
C127	4030016930	S.CER	ECJ0EB1A104K		B	48.3/21.5
C128	4030017460	S.CER	ECJ0EB1E102K		B	48.3/20.6
C129	4030017430	S.CER	ECJ0EC1H101J		T	32.2/14
C131	4030017460	S.CER	ECJ0EB1E102K		T	38/23.2
C132	4030017460	S.CER	ECJ0EB1E102K		T	44.7/37.1
C133	4030017460	S.CER	ECJ0EB1E102K		T	29.9/12.7
C135	4030017340	S.CER	ECJ0EC1H010B	[USA]	T	29/12.9
	4030017340	S.CER	ECJ0EC1H010B	[SEA]		
	4030017340	S.CER	ECJ0EC1H010B	[CHN]		
	4030017340	S.CER	ECJ0EC1H010B	[KOR]		
	4030017340	S.CER	ECJ0EC1H010B	[AUS]		
	4030017340	S.CER	ECJ0EC1H010B	[EXP]		
C136	4030017330	S.CER	ECJ0EF1C104Z		T	41.9/19.7
C137	4030017460	S.CER	ECJ0EB1E102K		T	47/16.5
C138	4030017460	S.CER	ECJ0EB1E102K		T	38/16.2
C142	4030017330	S.CER	ECJ0EF1C104Z		T	39.2/19.7
C143	4030017330	S.CER	ECJ0EF1C104Z		T	40.1/19.7
C144	4030017620	S.CER	ECJ0EC1H100C		T	48.2/15.6
C145	4030017460	S.CER	ECJ0EB1E102K		T	38.1/19
C146	4030016790	S.CER	ECJ0EB1C103K		T	12/31
C147	4030016790	S.CER	ECJ0EB1C103K		T	12/32.8
C148	4030016790	S.CER	ECJ0EB1C103K		T	13/29
C149	4030016790	S.CER	ECJ0EB1C103K		T	12/30.1
C150	4030016790	S.CER	ECJ0EB1C103K		T	38.6/34.7
C151	4030016930	S.CER	ECJ0EB1A104K		T	40.8/37.9
C152	4030016790	S.CER	ECJ0EB1C103K		T	40.4/32.3
C156	4030017460	S.CER	ECJ0EB1E102K		T	32.3/12.4
C157	4030017460	S.CER	ECJ0EB1E102K		T	46.9/31.1
C158	4030019460	S.CER	C1608 JB 0J 106M-T		T	47.3/32.1
C159	4030016790	S.CER	ECJ0EB1C103K		T	45.2/32.3
C160	4030016930	S.CER	ECJ0EB1A104K		T	36.5/10.9
C161	4030016790	S.CER	ECJ0EB1C103K		B	44.5/16.2
C166	4030019460	S.CER	C1608 JB 0J 106M-T		B	48.4/23.4
C172	4030017460	S.CER	ECJ0EB1E102K		B	35.2/41.2
C181	4030017460	S.CER	ECJ0EB1E102K		B	48.7/30.1
C201	4030017630	S.CER	ECJ0EC1H120J		B	14.4/42
C202	4030017500	S.CER	ECJ0EC1H560J		B	14.7/40.8
C203	4030017580	S.CER	ECJ0EC1H060C		B	11.5/43.5
C204	4030017660	S.CER	ECJ0EC1H330J		B	13.2/41.7
C205	4030017500	S.CER	ECJ0EC1H560J		B	11.9/41.7
C206	4030017400	S.CER	ECJ0EC1H220J		B	10.9/39.6
C207	4030017710	S.CER	ECJ0EC1H181J		B	13.5/40.4
C208	4030017600	S.CER	ECJ0EC1H080C		B	11.2/38.4
C209	4030017430	S.CER	ECJ0EC1H101J		B	13.3/38.5
C210	4030018860	S.CER	ECJ0EB0J105K		B	10.3/38.3
C211	4030016930	S.CER	ECJ0EB1A104K		B	14.5/35.8
C212	4030016930	S.CER	ECJ0EB1A104K		B	14.5/38.5
C250	4030017400	S.CER	ECJ0EC1H220J		B	8.1/31.7
C251	4030016790	S.CER	ECJ0EB1C103K		B	6.8/27
C252	4030017460	S.CER	ECJ0EB1E102K		B	5/31.2
C253	4030017640	S.CER	ECJ0EC1H150J		B	10.3/28.7
C254	4030016790	S.CER	ECJ0EB1C103K		B	11.5/28.2
C255	4030016790	S.CER	ECJ0EB1C103K		B	12.2/26.6
C256	4030016930	S.CER	ECJ0EB1A104K		B	12.2/25.7
C257	4030017620	S.CER	ECJ0EC1H100C		B	10.6/23.7
C258	4030016790	S.CER	ECJ0EB1C103K		B	13.7/19.2
C259	4030017460	S.CER	ECJ0EB1E102K		B	13.4/21.2
C260	4030017400	S.CER	ECJ0EC1H220J		B	10.9/20
C261	4030017420	S.CER	ECJ0EC1H470J		B	13.6/17.2
C262	4030017460	S.CER	ECJ0EB1E102K		T	6.6/6.6
C263	4030017420	S.CER	ECJ0EC1H470J		B	12.9/24.8
C264	4030017460	S.CER	ECJ0EB1E102K		T	9.6/9
C300	4030017460	S.CER	ECJ0EB1E102K		T	16.8/39.5
C301	4030017390	S.CER	ECJ0EC1H180J		T	19.9/39.7
C302	4030017640	S.CER	ECJ0EC1H150J		T	17.7/39.4
C303	4030017670	S.CER	ECJ0EC1H390J		T	19.9/38.8
C304	4030017380	S.CER	ECJ0EC1H050B		T	17.7/37.8
C305	4030017400	S.CER	ECJ0EC1H220J		T	19.9/37.9
C306	4030017650	S.CER	ECJ0EC1H270J		T	26.4/37.3
C307	4030017420	S.CER	ECJ0EC1H470J		T	25.2/36.7
C308	4030017630	S.CER	ECJ0EC1H120J		T	24.3/36.7
C309	4030017690	S.CER	ECJ0EC1H121J		T	24.8/35.5
C310	4030017400	S.CER	ECJ0EC1H220J		T	23.2/35.5
C311	4030017460	S.CER	ECJ0EB1E102K		T	22.8/39.2
C312	4030017620	S.CER	ECJ0EC1H100C		T	19/35.7
C313	4030016790	S.CER	ECJ0EB1C103K		T	13.4/38.5
C314	4030017430	S.CER	ECJ0EC1H101J		T	14.3/38.5
C315	4030017630	S.CER	ECJ0EC1H120J		T	12/36
C316	4030016790	S.CER	ECJ0EB1C103K		T	11.5/38.8
C317	4030017460	S.CER	ECJ0EB1E102K		T	6.4/37.6
C318	4030016790	S.CER	ECJ0EB1C103K		T	9.7/38.8
C319	4030016790	S.CER	ECJ0EB1C103K		T	3.6/39.6
C320	4030017430	S.CER	ECJ0EC1H101J		T	6.4/36.7
C321	4030017550	S.CER	ECJ0EC1H1R5B		T	6.4/35.8
C322	4030017460	S.CER	ECJ0EB1E102K		T	2.3/35.5
C323	4030017460	S.CER	ECJ0EB1E102K		T	3.5/36
C324	4030017460	S.CER	ECJ0EB1E102K		T	1.1/31.6
C325	4030017360	S.CER	ECJ0EC1H030B		T	3.9/30.6
C326	4030017460	S.CER	ECJ0EB1E102K		T	1.2/28.9
C327	4030016790	S.CER	ECJ0EB1C103K		T	1.2/29.8
C328	4030017730	S.CER	ECJ0EB1E471K		T	3/26.3
C329	4030017460	S.CER	ECJ0EB1E102K		T	5.3/12.1
C330	4030017460	S.CER	ECJ0EB1E102K		B	28.9/9.7
C331	4030017460	S.CER	ECJ0EB1E102K		T	6.1/7.8
C332	4030017460	S.CER	ECJ0EB1E102K		B	3.9/5.5
C337	4030017460	S.CER	ECJ0EB1E102K		B	7.3/40
C339	4030017440	S.CER	ECJ0EC1H221J		B	27/12
C340	4030017460	S.CER	ECJ0EB1E102K		T	21.6/38.6
C341	4030017460	S.CER	ECJ0EB1E102K		T	3.6/12.1
C343	4030017460	S.CER	ECJ0EB1E102K		T	5/7.2
C400	4030017440	S.CER	ECJ0EC1H221J		B	20.9/38.8
C401	4030017370	S.CER	ECJ0EC1H3R5B		B	21.4/37.6

M.=Mounted side (T: Mounted on the Top side, B: Mounted on the Bottom side)
S.=Surface mount

[RF UNIT]

REF NO.	PARTS NO.	DESCRIPTION		M.	H/V LOCATION
C402	4030018860	S.CER ECJ0EB0J105K		B	16.9/38.9
C403	4030017460	S.CER ECJ0EB1E102K		B	19.1/36.5
C404	4030016790	S.CER ECJ0EB1C103K		B	16.8/40.7
C405	4030017460	S.CER ECJ0EB1E102K		B	16.8/39.8
C407	4030017600	S.CER ECJ0EC1H080C		B	18.1/35.1
C408	4030017550	S.CER ECJ0EC1H1R5B		B	18.3/33
C409	4030017430	S.CER ECJ0EC1H101J		B	14.5/34.9
C410	4030017460	S.CER ECJ0EB1E102K		B	15.7/38.4
C411	4030017380	S.CER ECJ0EC1H050B		B	15.8/32.5
C412	4030018860	S.CER ECJ0EB0J105K		B	14/32.1
C414	4030016790	S.CER ECJ0EB1C103K		B	13.5/29.1
C415	4030017460	S.CER ECJ0EB1E102K		B	13.5/30
C417	4030017460	S.CER ECJ0EB1E102K		B	18.1/28.4
C418	4030017460	S.CER ECJ0EB1E102K		B	13.6/28.2
C419	4030017430	S.CER ECJ0EC1H101J		B	13.6/27.3
C420	4030017530	S.CER ECJ0EC1H0R5B		B	17.3/25.8
C421	4030017660	S.CER ECJ0EC1H330J		B	15.9/22.4
C422	4030017430	S.CER ECJ0EC1H101J		B	14.3/22.4
C423	4030017580	S.CER ECJ0EC1H060C		B	17.3/24.2
C424	4030017460	S.CER ECJ0EB1E102K		B	16.2/19.6
C425	4030017460	S.CER ECJ0EB1E102K		B	18.3/21.2
C426	4030017460	S.CER ECJ0EB1E102K		B	21.1/40
C427	4030017460	S.CER ECJ0EB1E102K		B	22.7/40
C457	4030017460	S.CER ECJ0EB1E102K		T	23.5/29
C462	4030017420	S.CER ECJ0EC1H470J		T	23.5/27.4
C463	4030016930	S.CER ECJ0EB1A104K		T	24.1/25.2
C466	4030017420	S.CER ECJ0EC1H470J	[EUR]		
	4030017420	S.CER ECJ0EC1H470J	[UK]		
	4030017420	S.CER ECJ0EC1H470J	[ITR]		
	4030017420	S.CER ECJ0EC1H470J	[FRA]		
C467	4030017420	S.CER ECJ0EC1H470J		B	24.6/10.6
C469	4030017420	S.CER ECJ0EC1H470J		B	25.5/10.6
C470	4030017420	S.CER ECJ0EC1H470J		B	26.9/5.3
C471	4030017420	S.CER ECJ0EC1H470J		B	26.7/9
C472	4030017460	S.CER ECJ0EB1E102K		T	23.4/24
C500	4030017380	S.CER ECJ0EC1H050B		B	29.7/28.5
C501	4030017460	S.CER ECJ0EB1E102K		B	26/31.8
C502	4030017610	S.CER ECJ0EC1H090C		B	26/27.2
C503	4030017460	S.CER ECJ0EB1E102K		B	26/26.1
C504	4030017590	S.CER ECJ0EC1H070C		B	28.8/25.8
C505	4030017460	S.CER ECJ0EB1E102K		B	30.3/25.4
C506	4030017460	S.CER ECJ0EB1E102K		B	32.1/21.3
C507	4030017460	S.CER ECJ0EB1E102K		B	28.4/21.9
C508	4030017460	S.CER ECJ0EB1E102K		B	26.4/23.9
C509	4030017390	S.CER ECJ0EC1H180J		B	30.5/20.4
C510	4030017340	S.CER ECJ0EC1H010B	[EUR]	B	31/18.9
	4030017340	S.CER ECJ0EC1H010B	[UK]		
	4030017340	S.CER ECJ0EC1H010B	[ITR]		
	4030017550	S.CER ECJ0EC1H1R5B	[USA]		
	4030017340	S.CER ECJ0EC1H010B	[FRA]		
	4030017550	S.CER ECJ0EC1H1R5B	[SEA]		
	4030017550	S.CER ECJ0EC1H1R5B	[CHN]		
	4030017550	S.CER ECJ0EC1H1R5B	[KOR]		
	4030017550	S.CER ECJ0EC1H1R5B	[AUS]		
	4030017550	S.CER ECJ0EC1H1R5B	[EXP]		
C511	4030017400	S.CER ECJ0EC1H220J		B	27.4/17.4
C512	4030017440	S.CER ECJ0EC1H221J		B	32/19.7
C513	4030017460	S.CER ECJ0EB1E102K		B	27/14.4
C514	4030017630	S.CER ECJ0EC1H120J		B	29.9/16.1
C515	4030017460	S.CER ECJ0EB1E102K		B	33.6/13.5
C516	4030017460	S.CER ECJ0EB1E102K		B	34/15.5
C517	4030017620	S.CER ECJ0EC1H100C		B	30.2/14.2
C523	4030017460	S.CER ECJ0EB1E102K		B	26.8/32.7
C524	4030017460	S.CER ECJ0EB1E102K		T	30.1/21.9
C600	4030017380	S.CER ECJ0EC1H050B		B	22.7/33.7
C601	4030017650	S.CER ECJ0EC1H270J		B	23.4/32.4
C602	4030017630	S.CER ECJ0EC1H120J		B	22.3/32.5
C603	4030018860	S.CER ECJ0EB0J105K		B	19.9/26.4
C604	4030017460	S.CER ECJ0EB1E102K		B	23.9/29.1
C608	4030017350	S.CER ECJ0EC1H020B		B	22.9/25.5
C609	4030017350	S.CER ECJ0EC1H020B		B	24.7/25.2
C610	4030017390	S.CER ECJ0EC1H180J		B	21.3/23.5
C611	4030017340	S.CER ECJ0EC1H010B		B	24.7/21.4
C613	4030017640	S.CER ECJ0EC1H150J		B	21/20.8
C614	4030017460	S.CER ECJ0EB1E102K		B	19.4/22.3
C615	4030017350	S.CER ECJ0EC1H020B		B	23.9/17.1
C616	4030018860	S.CER ECJ0EB0J105K		B	22.6/14.6
C618	4030016790	S.CER ECJ0EB1C103K		B	21.4/18.3
C619	4030017460	S.CER ECJ0EB1E102K		B	22.3/18.3
C620	4030017460	S.CER ECJ0EB1E102K		B	23.2/18.3
C621	4030017350	S.CER ECJ0EC1H020B		B	19.2/16.4
C622	4030017640	S.CER ECJ0EC1H150J		B	21.3/12.8
C623	4030017340	S.CER ECJ0EC1H010B		B	17.9/15.2
C625	4030017640	S.CER ECJ0EC1H150J		B	17.8/11.8
C626	4030017460	S.CER ECJ0EB1E102K		B	21.8/10.8
C627	4030017350	S.CER ECJ0EC1H020B		B	16.3/15.2
C630	4030017630	S.CER ECJ0EC1H120J		B	22.7/34.6
C631	4030017390	S.CER ECJ0EC1H180J		B	24.3/34.6
C633	4030016790	S.CER ECJ0EB1C103K		B	23.9/28.2
C634	4030017460	S.CER ECJ0EB1E102K		B	23.9/27.3
C674	4030017460	S.CER ECJ0EB1E102K		B	19.9/32.7
C701	4030017580	S.CER ECJ0EC1H060C		B	3.5/31.1
C702	4030017380	S.CER ECJ0EC1H050B		B	4.1/33.6
C703	4030017460	S.CER ECJ0EB1E102K		B	1.7/35
C704	4030017660	S.CER ECJ0EC1H330J		B	1.1/29
C705	4030017380	S.CER ECJ0EC1H050B		B	1.6/27.6
C706	4030017460	S.CER ECJ0EB1E102K		B	3.6/29.9
C707	4030017460	S.CER ECJ0EB1E102K		B	1.6/26
C708	4030017680	S.CER ECJ0EC1H820J		B	5.6/22.5
C709	4030017460	S.CER ECJ0EB1E102K		B	6.8/22.5
C710	4030017660	S.CER ECJ0EC1H330J		B	4.5/17.5
C711	4030017550	S.CER ECJ0EC1H1R5B		B	8.6/19.6
C713	4030017400	S.CER ECJ0EC1H220J		B	7.5/16.7
C714	4030017460	S.CER ECJ0EB1E102K		B	4.5/16.6
C715	4030017640	S.CER ECJ0EC1H150J		B	10.2/16.7

[RF UNIT]

REF NO.	PARTS NO.	DESCRIPTION		M.	H/V LOCATION
C716	4030017460	S.CER ECJ0EB1E102K		B	8.6/13.7
C717	4030017460	S.CER ECJ0EB1E102K		B	8/12.5
C718	4030017620	S.CER ECJ0EC1H100C		B	11.8/13.6
C724	4030017460	S.CER ECJ0EB1E102K		T	11/10.8
C725	4030017730	S.CER ECJ0EB1E471K		B	1.3/33.8
C802	4030017460	S.CER ECJ0EB1E102K		B	32.9/8.1
C803	4030017460	S.CER ECJ0EB1E102K		B	32.9/9
C804	4030017460	S.CER ECJ0EB1E102K		B	37/8.8
C806	4030017460	S.CER ECJ0EB1E102K		B	35.6/16.7
C813	4030017730	S.CER ECJ0EB1E471K		T	19.8/20
C817	4030017420	S.CER ECJ0EC1H470J	[EUR]		
	4030017420	S.CER ECJ0EC1H470J	[UK]		
	4030017420	S.CER ECJ0EC1H470J	[ITR]		
	4030017420	S.CER ECJ0EC1H470J	[FRA]		
C819	4030017460	S.CER ECJ0EB1E102K		T	21.5/19.5
C820	4550006910	S.TAN TEESVP 1C 334M8R		T	9.5/21.8
C821	4550007760	S.TAN TEESVP 1A 335M8R		T	7.7/21.8
C822	4340000260	S.MYL ECPU1C104MA5		T	11.8/21.5
C826	4030017420	S.CER ECJ0EC1H470J		B	15.6/17.8
C827	4030018860	S.CER ECJ0EB0J105K		B	38.5/12.4
C830	4030017440	S.CER ECJ0EC1H221J		T	24.4/17.5
C831	4030017460	S.CER ECJ0EB1E102K		T	20.3/15.7
C832	4550007940	S.TAN TCP0J226M8R		B	41.3/17.6
C833	4030018860	S.CER ECJ0EB0J105K		B	41.5/12.9
C834	4030017460	S.CER ECJ0EB1E102K		B	41.4/13.8
C835	4550007940	S.TAN TCP0J226M8R		B	36.2/14.6
C836	4030017460	S.CER ECJ0EB1E102K		B	39.6/16.2
C837	4030017460	S.CER ECJ0EB1E102K		T	19.6/17.5
C838	4030017730	S.CER ECJ0EB1E471K		B	15.3/19.6
C839	4030017440	S.CER ECJ0EC1H221J		B	18.4/19.3
C840	4030017420	S.CER ECJ0EC1H470J		B	33.1/19.6
C841	4030017730	S.CER ECJ0EB1E471K		T	21.5/21.6
C842	4030017730	S.CER ECJ0EB1E471K		T	16.7/28.7
C843	4030017730	S.CER ECJ0EB1E471K		T	16.7/29.6
C850	4030017460	S.CER ECJ0EB1E102K		T	10.7/12
C851	4030017460	S.CER ECJ0EB1E102K		T	12.7/7.6
C852	4030017620	S.CER ECJ0EC1H100C	[EUR]	T	14.6/11.1
	4030017620	S.CER ECJ0EC1H100C	[UK]		
	4030017620	S.CER ECJ0EC1H100C	[ITR]		
	4030017380	S.CER ECJ0EC1H050B	[USA]		
	4030017620	S.CER ECJ0EC1H100C	[FRA]		
	4030017380	S.CER ECJ0EC1H050B	[SEA]		
	4030017380	S.CER ECJ0EC1H050B	[CHN]		
	4030017380	S.CER ECJ0EC1H050B	[KOR]		
	4030017380	S.CER ECJ0EC1H050B	[AUS]		
	4030017380	S.CER ECJ0EC1H050B	[EXP]		
C853	4030017350	S.CER ECJ0EC1H020B		T	14.9/8.6
C854	4030017460	S.CER ECJ0EB1E102K		T	15.8/8.6
C856	4030017360	S.CER ECJ0EC1H030B		B	13.4/7.7
C857	4030017350	S.CER ECJ0EC1H020B		T	14.3/6.5
C858	4030016790	S.CER ECJ0EB1C103K		T	14.8/25.3
C859	4030018890	S.CER ECJ0EB0J224K		T	14.8/27.1
C860	4030017460	S.CER ECJ0EB1E102K		T	14.8/26.2
C862	4030018890	S.CER ECJ0EB0J224K		T	16.8/25.3
C900	4030016930	S.CER ECJ0EB1A104K		B	13.6/11.6
C901	4030017460	S.CER ECJ0EB1E102K		B	15.6/7.9
C906	4030017440	S.CER ECJ0EC1H221J		B	22.4/6.1
C907	4030017440	S.CER ECJ0EC1H221J		B	23.1/13.3
C908	4030017730	S.CER ECJ0EB1E471K		T	20.9/4
C909	4030017650	S.CER ECJ0EC1H270J		B	18/9.5
C910	4030017420	S.CER ECJ0EC1H470J		B	25.4/11.9
C911	4030017420	S.CER ECJ0EC1H470J		B	23.1/11.9
C914	4030017730	S.CER ECJ0EB1E471K		T	23.1/20.4
C919	4030017460	S.CER ECJ0EB1E102K		T	17.7/5.2
C920	4030017460	S.CER ECJ0EB1E102K		T	26.5/12.3
C921	4030017460	S.CER ECJ0EB1E102K		B	17.9/7.9
C951	4030017460	S.CER ECJ0EB1E102K		B	2.1/11.2
C952	4030017460	S.CER ECJ0EB1E102K		T	10.4/25.4
C1000	4030017460	S.CER ECJ0EB1E102K		B	41.2/9
C1001	4030017460	S.CER ECJ0EB1E102K	[EUR]		
	4030017460	S.CER ECJ0EB1E102K	[UK]		
	4030017460	S.CER ECJ0EB1E102K	[ITR]		
	4030017460	S.CER ECJ0EB1E102K	[FRA]		
C1002	4030017460	S.CER ECJ0EB1E102K		B	38.1/7
C1004	4030017460	S.CER ECJ0EB1E102K		T	24.2/2.8
C1005	4030017460	S.CER ECJ0EB1E102K		T	31.1/5.5
C1006	4030017460	S.CER ECJ0EB1E102K		T	36.5/7
C1007	4510009990	S.ELE EEEHA1C100R		T	44.7/12.2
C1008	4030017460	S.CER ECJ0EB1E102K		T	34.3/8.1
J800	6510025371	S.CON AXK816145WG		T	15.9/18
J1001	6510022861	S.CON AXK6S30447YG		T	21.9/9.1
EP100	6910019100	S.BEA MPZ1608S101AT		T	34.4/20
EP102	6910018460	S.BEA MMZ1005Y102C-T		T	30.9/30.7
EP103	6910018460	S.BEA MMZ1005Y102C-T		T	36.8/13.9
EP105	6910012350	S.BEA MMZ1608Y 102BT		T	38.2/21.1
EP150	6910018460	S.BEA MMZ1005Y102C-T		T	42/32.3
EP151	6910018460	S.BEA MMZ1005Y102C-T		B	43.2/17.1
EP152	6910018460	S.BEA MMZ1005Y102C-T		T	13.9/29.2
EP801	6910018460	S.BEA MMZ1005Y102C-T		T	21.5/20.4
EP802	6910018460	S.BEA MMZ1005Y102C-T		T	15.1/28.3
EP900	6910018460	S.BEA MMZ1005Y102C-T		B	15.7/7
EP1000	6910014730	S.BEA MPZ2012S331A-T		B	46.5/10.4
EP1001	6910019100	S.BEA MPZ1608S101AT		B	40.1/7.4
EP1002	6910019100	S.BEA MPZ1608S101AT		T	29/6

M.=Mounted side (T: Mounted on the Top side, B: Mounted on the Bottom side)
S.=Surface mount

[MAIN UNIT]

REF NO.	PARTS NO.	DESCRIPTION	M.	H/V LOCATION
IC100	1110003201	S.IC TA31136FNG(EL)	B	47.3/27.4
IC150	1110006380	S.IC LM2904PWR	B	18.3/29.3
IC500	1130011770	S.IC CD4066BPWR	B	18.4/40.5
IC501	1110003800	S.IC NJM2904V-TE1-#FMZB	B	18.3/20.3
IC600	1190002930	S.IC BU2502MUV-E2	T	22.2/16.8
IC701	1130011760	S.IC CD4094BPWR	B	12.5/9
IC702	1130011760	S.IC CD4094BPWR	T	12.5/9.1
IC800	1110006380	S.IC LM2904PWR	B	34/15.9
IC1000	1130009981	S.IC TC7W53FK(TE85L,F)	T	28.6/30.9
Q1	1530002601	S.TRA 2SC4215-O(TE85R,F)	T	27/21.6
Q2	1530002601	S.TRA 2SC4215-O(TE85R,F)	T	31/27.4
Q100	1530002601	S.TRA 2SC4215-O(TE85R,F)	B	47.2/37.9
Q101	1590003291	S.TRA UNR9213G0L	T	40.4/33.4
Q102	1590002010	S.TRA XP1114(TX)	T	42.7/34.2
Q103	1590001190	S.TRA XP6501-(TX).AB	B	31.8/34.1
Q104	1590001190	S.TRA XP6501-(TX).AB	B	25.5/38.9
Q105	1590003251	S.TRA UNR9115G0L	T	24.7/38.4
Q150	1590003251	S.TRA UNR9115G0L	T	20.3/38.9
Q152	1590003291	S.TRA UNR9213G0L	B	44/33.6
Q153	1590003251	S.TRA UNR9115G0L	B	39.9/13.9
Q154	1590003431	S.TRA UNR911HG0L	B	23/20.9
Q159	1590003291	S.TRA UNR9213G0L	T	42.4/27.7
Q200	1590003291	S.TRA UNR9213G0L	T	33.9/43.4
Q201	1590002010	S.TRA XP1114(TX)	T	36.5/42.8
Q450	1530002601	S.TRA 2SC4215-O(TE85R,F)	B	35.4/8.2
Q451	1530002601	S.TRA 2SC4215-O(TE85R,F)	B	41.7/9.2
Q452	1530003630	S.TRA 2SC4617 TLS	B	45.7/7.1
Q500	1590003281	S.TRA UNR9211G0L	B	13/15.9
Q552	1530004000	S.TRA 2SC4738-GR(TE85L,F)	T	18.6/32.3
Q700	1550000160	S.FET CPH3313-TL-E	T	4.8/43.1
Q701	1590003291	S.TRA UNR9213G0L	T	4.6/39.4
Q800	1510001100	S.TRA 2SA1832-GR(TE85R,F)	B	32.3/8.2
Q801	1590003291	S.TRA UNR9213G0L	B	30.9/13.1
Q803	1590003281	S.TRA UNR9211G0L	T	30.7/16.7
Q804	1520000460	S.TRA 2SB1132 T100 R	T	31.8/9.4
Q805	1590001170	S.TRA XP1501-(TX).AB	T	33.8/15
D2	1750001070	S.DIO DAN235ETL	B	25.8/20.1
D3	1750001070	S.DIO DAN235ETL	B	37.8/35.9
D4	1790000981	S.DIO MA3J7420GL	B	35.6/36.8
D10	1750001210	S.DIO HSB88ASTR-E	T	29.3/23.4
D100	1790001241	S.DIO MA2S7280GL	T	30.3/35.3
D102	1790001251	S.DIO MA2S1110GL	B	48.8/15.7
D103	1790001251	S.DIO MA2S1110GL	B	48.8/19.1
D104	1790001241	S.DIO MA2S7280GL	B	26.4/35.3
D105	1790001251	S.DIO MA2S1110GL	B	47.6/15.7
D106	1790001251	S.DIO MA2S1110GL	B	47.6/19.1
D150	1790001251	S.DIO MA2S1110GL	B	42.2/15.6
D151	1790001251	S.DIO MA2S1110GL	B	42.2/19
D450	1750001070	S.DIO DAN235ETL	B	48/13.3
D700	1790001241	S.DIO MA2S7280GL	T	8.1/43.6
D800	1730002261	S.ZEN MAZ8030GHL	B	35.6/25.3
FI2	2020001800	S.CER SFECV13M3DA0001-R0 (SFECV13.35 MHz)	B	37.1/32.5
FI50	2030000720	S.MON MFT61.6M 61.650 MHz (FL-429)	B	27.6/27.6
FI100	2020002490	CER LTM450EW <JJE>		
FI200	2020002570	CER LTM450HW <JJE>		
X100	6070000300	S.DIS JTBM450CX24 <JJE>	T	47.5/35.8
X450	6050012830	S.XTA CR-875 TTS14VSB-A4 15.3 MHz	T	46.4/8.3
L1	6200005140	S.COI MLF1608D R33K-T	T	27.3/24.5
L10	6200010381	S.COI ELJRE R15JFA	B	27.2/17
L30	6200009181	S.COI ELJRE R10JFA	B	28.4/17
L100	6200007170	S.COI MLF1608A 3R3K-T	B	48.7/35.1
L101	6200003131	S.COI NLV32T-120J	T	41.8/37
L450	6200005190	S.COI MLF1608D R56K-T	B	43.7/8.2
L451	6200005190	S.COI MLF1608D R56K-T	B	45.2/10.8
L452	6200003540	S.COI MLF1608D R22K-T	B	47.4/6.2
L453	6200003630	S.COI MLF1608D R68K-T	B	48.5/9.8
L454	6200003630	S.COI MLF1608D R68K-T	B	47.4/8.1
R6	7030007290	S.RES ERJ2GEJ 222 X (2.2K)	B	26.6/22
R7	7030007290	S.RES ERJ2GEJ 222 X (2.2K)	B	28.7/20.8
R8	7030004990	S.RES ERJ2GEJ 221 X (220)	B	29/22.2
R9	7030004990	S.RES ERJ2GEJ 221 X (220)	B	27.5/32.5
R10	7030007290	S.RES ERJ2GEJ 222 X (2.2K)	B	29.3/33.4
R11	7030007290	S.RES ERJ2GEJ 222 X (2.2K)	B	38.7/37.2
R14	7030009200	S.RES ERJ2GEJ 390 X (39)	B	29.5/19.2
R15	7030005170	S.RES ERJ2GEJ 474 X (470K)	T	28.7/20.5
R16	7030004980	S.RES ERJ2GEJ 101 X (100)	T	27.8/26.3
R17	7030005170	S.RES ERJ2GEJ 474 X (470K) [EUR]	T	28.3/27.5
	7030005170	S.RES ERJ2GEJ 474 X (470K) [UK]		
	7030005170	S.RES ERJ2GEJ 474 X (470K) [ITR]		
	7030005090	S.RES ERJ2GEJ 104 X (100K) [USA]		
	7030005170	S.RES ERJ2GEJ 474 X (470K) [FRA]		
	7030005170	S.RES ERJ2GEJ 474 X (470K) [SEA]		
	7030005170	S.RES ERJ2GEJ 474 X (470K) [CHN]		
	7030005170	S.RES ERJ2GEJ 474 X (470K) [KOR]		
	7030005170	S.RES ERJ2GEJ 474 X (470K) [AUS]		
	7030005170	S.RES ERJ2GEJ 474 X (470K) [EXP]		

[MAIN UNIT]

REF NO.	PARTS NO.	DESCRIPTION	M.	H/V LOCATION
R18	7030007280	S.RES ERJ2GEJ 331 X (330) [EUR]	T	27.4/27.5
	7030007280	S.RES ERJ2GEJ 331 X (330) [UK]		
	7030007280	S.RES ERJ2GEJ 331 X (330) [ITR]		
	7030007570	S.RES ERJ2GEJ 122 X (1.2K) [USA]		
	7030007280	S.RES ERJ2GEJ 331 X (330) [FRA]		
	7030007280	S.RES ERJ2GEJ 331 X (330) [SEA]		
	7030007280	S.RES ERJ2GEJ 331 X (330) [CHN]		
	7030007280	S.RES ERJ2GEJ 331 X (330) [KOR]		
	7030007280	S.RES ERJ2GEJ 331 X (330) [AUS]		
	7030007280	S.RES ERJ2GEJ 331 X (330) [EXP]		
R19	7030007290	S.RES ERJ2GEJ 222 X (2.2K)	B	36.5/40.4
R23	7030010040	S.RES ERJ2GEJ-JPW	B	34.5/29.4
R24	7030007280	S.RES ERJ2GEJ 331 X (330)	B	38.7/29.8
R25	7030005290	S.RES ERJ2GEJ 682 X (6.8K) [EUR]	T	31.5/25.5
	7030005290	S.RES ERJ2GEJ 682 X (6.8K) [UK]		
	7030005290	S.RES ERJ2GEJ 682 X (6.8K) [ITR]		
	7030005050	S.RES ERJ2GEJ 103 X (10K) [USA]		
	7030005290	S.RES ERJ2GEJ 682 X (6.8K) [FRA]		
	7030005290	S.RES ERJ2GEJ 682 X (6.8K) [SEA]		
	7030005290	S.RES ERJ2GEJ 682 X (6.8K) [CHN]		
	7030005290	S.RES ERJ2GEJ 682 X (6.8K) [KOR]		
	7030005290	S.RES ERJ2GEJ 682 X (6.8K) [AUS]		
	7030005290	S.RES ERJ2GEJ 682 X (6.8K) [EXP]		
R55	7030005120	S.RES ERJ2GEJ 102 X (1K)	B	27.7/5.4
R100	7030008290	S.RES ERJ2GEJ 183 X (18K)	B	46.8/33.9
R101	7030008410	S.RES ERJ2GEJ 392 X (3.9K)	B	46.3/35.2
R102	7030004990	S.RES ERJ2GEJ 221 X (220)	B	44.9/38.1
R104	7030004990	S.RES ERJ2GEJ 221 X (220)	B	45.4/36
R105	7030007570	S.RES ERJ2GEJ 122 X (1.2K)	T	42.6/39.3
R106	7030007570	S.RES ERJ2GEJ 122 X (1.2K)	T	51.3/34.8
R107	7030005240	S.RES ERJ2GEJ 473 X (47K)	B	48.7/32.7
R108	7030005030	S.RES ERJ2GEJ 152 X (1.5K)	B	48.3/23.1
R109	7030005720	S.RES ERJ2GEJ 563 X (56K)	T	45.7/28.3
R110	7030007340	S.RES ERJ2GEJ 153 X (15K)	T	44.1/27.4
R111	7030005100	S.RES ERJ2GEJ 154 X (150K)	T	45.7/26.5
R112	7030005120	S.RES ERJ2GEJ 102 X (1K)	T	44.1/26.5
R113	7030005310	S.RES ERJ2GEJ 124 X (120K)	T	45/24.1
R114	7030008010	S.RES ERJ2GEJ 123 X (12K)	T	48.2/23.2
R115	7030005050	S.RES ERJ2GEJ 103 X (10K)	B	50.1/17.4
R116	7030005050	S.RES ERJ2GEJ 103 X (10K)	B	50.1/18.3
R117	7030009290	S.RES ERJ2GEJ 562 X (5.6K)	B	48.4/17.4
R119	7030008010	S.RES ERJ2GEJ 123 X (12K)	B	47.7/20.7
R120	7030005030	S.RES ERJ2GEJ 152 X (1.5K)	B	28.4/36
R121	7030005120	S.RES ERJ2GEJ 102 X (1K)	B	28.4/36.9
R122	7030005240	S.RES ERJ2GEJ 473 X (47K)	B	32.2/36
R123	7030005100	S.RES ERJ2GEJ 154 X (150K)	B	29.9/34.7
R124	7030005170	S.RES ERJ2GEJ 474 X (470K)	B	26.1/36.3
R125	7030005600	S.RES ERJ2GEJ 273 X (27K)	B	23.9/42.3
R126	7030005060	S.RES ERJ2GEJ 333 X (33K)	B	22.2/42.3
R127	7030005040	S.RES ERJ2GEJ 472 X (4.7K)	B	22.2/40.4
R129	7030004980	S.RES ERJ2GEJ 101 X (100)	T	26.2/37.8
R130	7030007340	S.RES ERJ2GEJ 153 X (15K)	B	29/34.6
R133	7030007350	S.RES ERJ2GEJ 393 X (39K)	B	18.4/44.8
R150	7030005050	S.RES ERJ2GEJ 103 X (10K)	B	20.7/35.9
R151	7030005090	S.RES ERJ2GEJ 104 X (100K)	B	21.9/36.6
R152	7030005080	S.RES ERJ2GEJ 823 X (82K)	B	19.5/35.8
R153	7030005080	S.RES ERJ2GEJ 823 X (82K)	B	19.1/34.6
R154	7030005080	S.RES ERJ2GEJ 823 X (82K)	B	17.8/34.1
R155	7030005230	S.RES ERJ2GEJ 334 X (330K)	B	15.5/27.3
R156	7030005100	S.RES ERJ2GEJ 154 X (150K)	B	14/31.6
R157	7030005070	S.RES ERJ2GEJ 683 X (68K)	B	14.9/31.6
R158	7030005240	S.RES ERJ2GEJ 473 X (47K)	B	14.8/30.4
R159	7030005160	S.RES ERJ2GEJ 105 X (1M)	B	13.7/29.2
R161	7030005090	S.RES ERJ2GEJ 104 X (100K)	B	12.5/28.7
R162	7030005050	S.RES ERJ2GEJ 103 X (10K)	B	41/17.9
R163	7030005050	S.RES ERJ2GEJ 103 X (10K)	B	41/16.6
R164	7030005060	S.RES ERJ2GEJ 333 X (33K)	T	43.4/29.2
R165	7030005030	S.RES ERJ2GEJ 152 X (1.5K)	B	45.4/34.3
R166	7030005050	S.RES ERJ2GEJ 103 X (10K)	T	51.3/23.7
R190	7030005090	S.RES ERJ2GEJ 104 X (100K)	T	23.9/37.1
R210	7030007290	S.RES ERJ2GEJ 222 X (2.2K)	B	17.4/15.2
R217	7030005050	S.RES ERJ2GEJ 103 X (10K)	T	18.9/23.1
R218	7030009140	S.RES ERJ2GEJ 272 X (2.7K)	B	12.9/44.8
R219	7030005120	S.RES ERJ2GEJ 102 X (1K)	B	13.4/43.6
R260	7030005090	S.RES ERJ2GEJ 104 X (100K)	B	22.1/38.7
R450	7030007060	S.RES ERJ2GEJ 684X (680K)	T	50/8.3
R451	7030007340	S.RES ERJ2GEJ 153 X (15K)	T	44/11.7
R452	7030008300	S.RES ERJ2GEJ 184 X (180K)	T	46.1/11.3
R453	7030005090	S.RES ERJ2GEJ 104 X (100K)	T	49.4/11.3
R455	7030004980	S.RES ERJ2GEJ 101 X (100)	B	37.6/8.4
R456	7030005070	S.RES ERJ2GEJ 683 X (68K)	B	38.1/7.2
R457	7030005080	S.RES ERJ2GEJ 823 X (82K)	B	36.1/5.9
R458	7030005120	S.RES ERJ2GEJ 102 X (1K)	B	35.2/5.9
R459	7030005000	S.RES ERJ2GEJ 471 X (470) [EUR]	B	42.5/6.6
	7030005000	S.RES ERJ2GEJ 471 X (470) [UK]		
	7030005000	S.RES ERJ2GEJ 471 X (470) [ITR]		
	7030007290	S.RES ERJ2GEJ 222 X (2.2K) [USA]		
	7030005000	S.RES ERJ2GEJ 471 X (470) [FRA]		
	7030005000	S.RES ERJ2GEJ 471 X (470) [SEA]		
	7030005000	S.RES ERJ2GEJ 471 X (470) [CHN]		
	7030005000	S.RES ERJ2GEJ 471 X (470) [KOR]		
	7030005000	S.RES ERJ2GEJ 471 X (470) [AUS]		
	7030005000	S.RES ERJ2GEJ 471 X (470) [EXP]		
R460	7030005090	S.RES ERJ2GEJ 104 X (100K)	B	41.3/7.5
R470	7030008280	S.RES ERJ2GEJ 271 X (270)	B	48.5/5.1
R471	7030008300	S.RES ERJ2GEJ 184 X (180K)	B	45.3/5.5
R473	7030005050	S.RES ERJ2GEJ 103 X (10K)	B	45.7/12.7
R474	7030005040	S.RES ERJ2GEJ 472 X (4.7K)	B	45.7/14.2
R475	7030005050	S.RES ERJ2GEJ 103 X (10K)	B	49.2/11.3
R500	7030005090	S.RES ERJ2GEJ 104 X (100K)	B	12.1/19.4
R501	7030005120	S.RES ERJ2GEJ 102 X (1K)	B	12.5/20.7
R502	7030008010	S.RES ERJ2GEJ 123 X (12K)	B	12.2/22
R503	7030007340	S.RES ERJ2GEJ 153 X (15K)	B	15/23.8
R504	7030007060	S.RES ERJ2GEJ 684X (680K)	B	18.2/24.6
R505	7030005110	S.RES ERJ2GEJ 224 X (220K)	B	14.6/20.8

M.=Mounted side (T: Mounted on the Top side, B: Mounted on the Bottom side)
S.=Surface mount

[MAIN UNIT]

REF NO.	PARTS NO.	DESCRIPTION	M.	H/V LOCATION
R506	7030005090	S.RES ERJ2GEJ 104 X (100K)	B	14.6/19
R507	7030005220	S.RES ERJ2GEJ 223 X (22K)	B	15.5/17.8
R508	7030005220	S.RES ERJ2GEJ 223 X (22K)	B	15.5/16.2
R509	7030005220	S.RES ERJ2GEJ 223 X (22K)	B	15.9/14.9
R559	7030007290	S.RES ERJ2GEJ 222 X (2.2K)	T	19.5/29.5
R560	7030005100	S.RES ERJ2GEJ 154 X (150K)	T	21.4/35.2
R561	7030005240	S.RES ERJ2GEJ 473 X (47K)	T	20.1/35.7
R562	7030005160	S.RES ERJ2GEJ 105 X (1M)	T	18.8/33.9
R564	7030005170	S.RES ERJ2GEJ 474 X (470K)	T	20.1/31.9
R565	7030008280	S.RES ERJ2GEJ 271 X (270)	T	17.2/32.5
R603	7030005220	S.RES ERJ2GEJ 223 X (22K)	T	14.4/16.5
R604	7030005050	S.RES ERJ2GEJ 103 X (10K)	T	16.8/15.6
R605	7030005120	S.RES ERJ2GEJ 102 X (1K)	T	21.8/12.3
R606	7030009270	S.RES ERJ2GEJ 821 X (820)	T	21.2/11.1
R607	7030010040	S.RES ERJ2GEJ-JPW	T	25.7/12.7
R700	7030005120	S.RES ERJ2GEJ 102 X (1K)	B	5.2/30.5
R701	7030005000	S.RES ERJ2GEJ 471 X (470)	T	7/43.1
R702	7030005090	S.RES ERJ2GEJ 104 X (100K)	T	5.6/40.9
R703	7030005000	S.RES ERJ2GEJ 471 X (470)	T	4/40.9
R704	7030005050	S.RES ERJ2GEJ 103 X (10K)	T	3.1/38.5
R705	7030005240	S.RES ERJ2GEJ 473 X (47K)	B	9/12.5
R706	7030005240	S.RES ERJ2GEJ 473 X (47K)	T	4.7/37.8
R800	7030005050	S.RES ERJ2GEJ 103 X (10K)	B	32.3/6.7
R801	7030005050	S.RES ERJ2GEJ 103 X (10K)	B	32.3/9.8
R802	7030005050	S.RES ERJ2GEJ 103 X (10K)	B	32.9/22.4
R803	7030012250	S.RES ERJ2RKD 1004X (1M)	B	33.2/20.3
R804	7030012260	S.RES ERJ2RKD 4703X (470K)	B	34.8/23
R805	7030012270	S.RES ERJ2RKD 1203X (120K)	B	31.3/11.6
R806	7030012270	S.RES ERJ2RKD 1203X (120K)	B	31.3/10.7
R807	7030012250	S.RES ERJ2RKD 1004X (1M)	B	34.8/21.2
R808	7030012260	S.RES ERJ2RKD 4703X (470K)	B	34.8/22.1
R811	7030005040	S.RES ERJ2GEJ 472 X (4.7K)	T	32.7/13.2
R812	7030005050	S.RES ERJ2GEJ 103 X (10K)	T	34.4/12.3
R813	7030005000	S.RES ERJ2GEJ 471 X (470)	T	32.5/16.8
R814	7030005050	S.RES ERJ2GEJ 103 X (10K)	T	33.2/18
R815	7030005160	S.RES ERJ2GEJ 105 X (1M)	T	34.4/19.4
R1004	7030010010	S.RES ERJ2RKF 334 X (330K)	T	24.9/30.3
R1005	7030007610	S.RES RR0510P-683-D (68K)	T	27.3/33.1
R1006	7030010010	S.RES ERJ2RKF 334 X (330K)	T	24/31.3
R1007	7030007610	S.RES RR0510P-683-D (68K)	T	25.8/32.5
C3	4030016790	S.CER ECJ0EB1C103K	B	25.1/18.4
C4	4030016790	S.CER ECJ0EB1C103K	B	27.8/21.7
C5	4030017580	S.CER ECJ0EC1H060C	B	27.8/22.6
C6	4030017400	S.CER ECJ0EC1H220J	B	30.9/29.4
C7	4030017590	S.CER ECJ0EC1H070C	B	25.8/32.5
C8	4030016790	S.CER ECJ0EB1C103K	B	29.3/32.5
C9	4030016790	S.CER ECJ0EB1C103K	B	39.9/36.6
C10	4030017620	S.CER ECJ0EC1H100C	B	28.6/19.2
C12	4030016790	S.CER ECJ0EB1C103K	T	26.2/24
C13	4030017430	S.CER ECJ0EC1H101J	T	30.3/25.1
C14	4030017460	S.CER ECJ0EB1E102K	T	32.4/24.6
C15	4030016790	S.CER ECJ0EB1C103K	T	29.2/27.5
C16	4030016930	S.CER ECJ0EB1A104K	B	34.1/28.2
C17	4030016930	S.CER ECJ0EB1A104K	B	39.9/35.7
C18	4030017380	S.CER ECJ0EC1H050B	B	27.4/18.7
C19	4030017510	S.CER ECJ0EC1H680J	B	29.5/16.7
C20	4030017510	S.CER ECJ0EC1H680J	B	26.2/16.7
C24	4030017780	S.CER ECJ0EB1E472K	B	27.5/33.9
C25	4030017780	S.CER ECJ0EB1E472K	B	36.5/42.6
C26	4030017780	S.CER ECJ0EB1E472K	B	30.4/19.2
C29	4030017780	S.CER ECJ0EB1E472K	B	29.9/22.2
C30	4030016790	S.CER ECJ0EB1C103K	B	26.2/18.3
C31	4030017460	S.CER ECJ0EB1E102K	B	37.3/37.7
C61	4030017620	S.CER ECJ0EC1H100C	B	27.7/6.3
C102	4030016790	S.CER ECJ0EB1C103K	B	44.9/39
C104	4030017460	S.CER ECJ0EB1E102K	B	47.2/39.9
C105	4030016790	S.CER ECJ0EB1C103K	B	49.6/33.7
C106	4030017460	S.CER ECJ0EB1E102K	T	38.8/33.4
C108	4030017510	S.CER ECJ0EC1H680J	T	41.7/39.3
C109	4030018140	S.CER ECJ0EB1H391K	T	43.5/39.3
C110	4030019460	S.CER C1608 JB 0J 106M-T	T	43.6/31.4
C111	4030017680	S.CER ECJ0EC1H820J	T	45.7/30.8
C112	4030017430	S.CER ECJ0EC1H101J	T	47.8/30.4
C113	4030016790	S.CER ECJ0EB1C103K	T	49.3/27.6
C114	4030019460	S.CER C1608 JB 0J 106M-T	T	47.8/26.8
C115	4030016930	S.CER ECJ0EB1A104K	B	50.9/26.8
C116	4030016930	S.CER ECJ0EB1A104K	T	50.2/27.6
C117	4030017040	S.CER ECJ0EB1A333K	T	46.9/30.4
C118	4030017460	S.CER ECJ0EB1E102K	T	44.1/28.3
C119	4030017460	S.CER ECJ0EB1E102K	T	45.7/29.2
C120	4030017460	S.CER ECJ0EB1E102K	T	45.7/27.4
C121	4030017730	S.CER ECJ0EB1E471K	T	44.6/25.3
C122	4030017730	S.CER ECJ0EB1E471K	T	45.5/25.3
C123	4030016930	S.CER ECJ0EB1A104K	T	48.5/24.5
C124	4030016930	S.CER ECJ0EB1A104K	B	47.6/21.9
C125	4030016930	S.CER ECJ0EB1A104K	B	50.9/27.7
C126	4030017430	S.CER ECJ0EC1H101J	B	48.6/21.9
C127	4030018900	S.CER ECJ0EB0J474K	B	28.4/38.1
C128	4030016790	S.CER ECJ0EB1C103K	B	30.4/36
C130	4550007940	S.TAN TCP0J226M8R	B	23.6/43.8
C131	4030016930	S.CER ECJ0EB1A104K	T	23.3/38.7
C133	4030017460	S.CER ECJ0EB1E102K	B	23.9/41.4
C134	4030016790	S.CER ECJ0EB1C103K	B	22.2/41.3
C136	4030016930	S.CER ECJ0EB1A104K	B	50.1/16.5
C137	4030016930	S.CER ECJ0EB1A104K	B	50.1/19.2
C142	4030017430	S.CER ECJ0EC1H101J	B	30.5/31.9
C143	4030018860	S.CER ECJ0EB0J105K	B	21.1/44.3
C144	4030016930	S.CER ECJ0EB1A104K	B	45.4/32.7
C150	4030017770	S.CER ECJ0EB1E332K	B	23.1/36.2
C151	4030017720	S.CER ECJ0EB1H331K	B	22.1/37.8
C152	4030016940	S.CER ECJ0EB1A393K	B	20.4/34.2
C153	4030017910	S.CER ECJ0EB1H152K	B	19.1/33.7
C154	4030016930	S.CER ECJ0EB1A104K	B	16.8/34.1

[MAIN UNIT]

REF NO.	PARTS NO.	DESCRIPTION	M.	H/V LOCATION
C155	4030018860	S.CER ECJ0EB0J105K	B	12.5/30.6
C156	4030016930	S.CER ECJ0EB1A104K	B	15.2/26.1
C157	4030016930	S.CER ECJ0EB1A104K	B	12.5/29.6
C158	4030017430	S.CER ECJ0EC1H101J	B	14.6/29.2
C161	4030017460	S.CER ECJ0EB1E102K	T	42.3/26.1
C170	4030017460	S.CER ECJ0EB1E102K	B	38/14.5
C171	4030016930	S.CER ECJ0EB1A104K	B	41.4/14.2
C172	4030016930	S.CER ECJ0EB1A104K	B	41.4/20.4
C173	4030017460	S.CER ECJ0EB1E102K	B	50.1/15.3
C182	4030016790	S.CER ECJ0EB1C103K	B	28.4/39
C192	4030017460	S.CER ECJ0EB1E102K	B	38/12.7
C193	4030017460	S.CER ECJ0EB1E102K	B	21.6/21.4
C194	4030017460	S.CER ECJ0EB1E102K	T	22.5/37.1
C405	4030016790	S.CER ECJ0EB1C103K	B	39/7.2
C450	4030016930	S.CER ECJ0EB1A104K	T	46.3/5
C451	4030017460	S.CER ECJ0EB1E102K	T	42.7/6.8
C452	4030019460	S.CER C1608 JB 0J 106M-T	T	41.9/11.6
C453	4030017460	S.CER ECJ0EB1E102K	T	45.2/11.3
C454	4030017460	S.CER ECJ0EB1E102K	T	50.6/11.8
C455	4030016790	S.CER ECJ0EB1C103K	B	37.1/7.2
C456	4030016790	S.CER ECJ0EB1C103K	B	34.3/5.9
C457	4030017460	S.CER ECJ0EB1E102K	B	43.4/5.3
C458	4030016790	S.CER ECJ0EB1C103K	B	40.7/11
C459	4030017430	S.CER ECJ0EC1H101J	B	39.9/8.1
C460	4030017390	S.CER ECJ0EC1H180J	B	45/9.7
C461	4030017360	S.CER ECJ0EC1H030B	B	43.5/10.3
C462	4030017630	S.CER ECJ0EC1H120J	B	45.7/11.8
C463	4030017570	S.CER ECJ0EC1H040B	B	42.3/11
C464	4030017460	S.CER ECJ0EB1E102K	B	48.5/6.7
C465	4030016790	S.CER ECJ0EB1C103K	B	45.3/8.6
C466	4030017460	S.CER ECJ0EB1E102K	B	41.3/6.6
C468	4030017570	S.CER ECJ0EC1H040B	B	46.8/9.5
C470	4030017380	S.CER ECJ0EC1H050B	B	46.9/11.3
C471	4030017710	S.CER ECJ0EC1H181J	B	49.1/8.4
C472	4030016790	S.CER ECJ0EB1C103K	B	47.8/11.3
C473	4030016790	S.CER ECJ0EB1C103K	B	46.6/14.2
C500	4030016930	S.CER ECJ0EB1A104K	B	15.6/37.1
C504	4030016930	S.CER ECJ0EB1A104K	B	13.4/21.6
C505	4030016790	S.CER ECJ0EB1C103K	B	14.6/22.6
C506	4030017770	S.CER ECJ0EB1E332K	B	15.8/22.2
C507	4030018090	S.CER ECJ0EB1C822K	B	16.6/24.6
C508	4030016930	S.CER ECJ0EB1A104K	B	14.6/19.9
C509	4030016930	S.CER ECJ0EB1A104K	B	19.8/24.8
C510	4030016790	S.CER ECJ0EB1C103K	B	14.6/16.2
C512	4030017790	S.CER ECJ0EB1E682K	B	15.9/14
C513	4030017910	S.CER ECJ0EB1H152K	B	16.4/16.2
C514	4030016930	S.CER ECJ0EB1A104K	B	18.3/14.9
C558	4030016930	S.CER ECJ0EB1A104K	T	18/30.7
C559	4030017460	S.CER ECJ0EB1E102K	T	20.1/34.8
C560	4030018390	S.CER ECJ0EB1A563K	T	21/33.6
C561	4030017330	S.CER ECJ0EF1C104Z	T	20.1/33.6
C562	4030016930	S.CER ECJ0EB1A104K	T	18.9/26
C600	4030017460	S.CER ECJ0EB1E102K	T	26.7/18.3
C601	4030019460	S.CER C1608 JB 0J 106M-T	T	24.1/24.3
C602	4030017460	S.CER ECJ0EB1E102K	T	22.4/11.1
C605	4030018860	S.CER ECJ0EB0J105K	T	14.4/15.6
C608	4030017460	S.CER ECJ0EB1E102K	T	7/5.5
C610	4550006970	S.TAN TEESVA0G476M8R	T	18.2/12.9
C701	4030017460	S.CER ECJ0EB1E102K	B	9.9/12.5
C702	4030017460	S.CER ECJ0EB1E102K	B	8.1/11.7
C703	4030017460	S.CER ECJ0EB1E102K	T	7.9/5.5
C704	4030017460	S.CER ECJ0EB1E102K	B	4.8/13.2
C705	4030017460	S.CER ECJ0EB1E102K	B	4.8/29.2
C706	4030017460	S.CER ECJ0EB1E102K	B	4.3/30.5
C707	4030017420	S.CER ECJ0EC1H470J	B	27.7/45.7
C708	4030017420	S.CER ECJ0EC1H470J	B	28.6/45.7
C710	4030017420	S.CER ECJ0EC1H470J	B	19.9/46.6
C712	4030017460	S.CER ECJ0EB1E102K	T	9.2/43.6
C713	4030017460	S.CER ECJ0EB1E102K	T	8.8/40.5
C714	4030017420	S.CER ECJ0EC1H470J	T	6.9/40.5
C715	4030017460	S.CER ECJ0EB1E102K	T	7.9/40.5
C716	4030017460	S.CER ECJ0EB1E102K [EUR]	T	10.1/44.5
	4030017460	S.CER ECJ0EB1E102K [UK]		
	4030017460	S.CER ECJ0EB1E102K [ITR]		
	4030017460	S.CER ECJ0EB1E102K [FRA]		
C717	4030017460	S.CER ECJ0EB1E102K [EUR]	T	12.1/43.6
	4030017460	S.CER ECJ0EB1E102K [UK]		
	4030017460	S.CER ECJ0EB1E102K [ITR]		
	4030017460	S.CER ECJ0EB1E102K [FRA]		
C719	4030017460	S.CER ECJ0EB1E102K	B	25.7/45.4
C720	4030017420	S.CER ECJ0EC1H470J	B	40.5/43.3
C721	4030017420	S.CER ECJ0EC1H470J	B	44.5/43.3
C724	4030017420	S.CER ECJ0EC1H470J	B	31.3/37.8
C730	4030017460	S.CER ECJ0EB1E102K	B	24/15.3
C731	4030017460	S.CER ECJ0EB1E102K	B	24.9/15.3
C732	4030017460	S.CER ECJ0EB1E102K	B	29.2/9.8
C733	4030017460	S.CER ECJ0EB1E102K	B	20.1/4.3
C734	4030017460	S.CER ECJ0EB1E102K	T	24.8/5.4
C735	4030017460	S.CER ECJ0EB1E102K	B	23.1/14.2
C736	4030017420	S.CER ECJ0EC1H470J [EUR]	T	20.3/4
	4030017420	S.CER ECJ0EC1H470J [UK]		
	4030017420	S.CER ECJ0EC1H470J [ITR]		
	4030017420	S.CER ECJ0EC1H470J [FRA]		
C737	4030017420	S.CER ECJ0EC1H470J [EUR]	B	26.9/14.1
	4030017420	S.CER ECJ0EC1H470J [UK]		
	4030017420	S.CER ECJ0EC1H470J [ITR]		
	4030017420	S.CER ECJ0EC1H470J [FRA]		
C752	4030017460	S.CER ECJ0EB1E102K	T	16/35.4
C754	4030017460	S.CER ECJ0EB1E102K	T	14.4/33.4
C755	4030017460	S.CER ECJ0EB1E102K	T	14.4/32.4
C756	4030017460	S.CER ECJ0EB1E102K	T	14.4/31.4
C758	4030017460	S.CER ECJ0EB1E102K	T	16.5/28.8
C759	4030017460	S.CER ECJ0EB1E102K	T	14.4/27.9
C760	4030017460	S.CER ECJ0EB1E102K	T	14.4/27
C761	4030017460	S.CER ECJ0EB1E102K	T	15.6/26.1

M.=Mounted side (T: Mounted on the Top side, B: Mounted on the Bottom side)
S.=Surface mount

[MAIN UNIT]

REF NO.	PARTS NO.	DESCRIPTION	M.	H/V LOCATION
C763	4030017460	S.CER ECJ0EB1E102K	T	15.4/24.6
C765	4030017460	S.CER ECJ0EB1E102K	T	15.4/22.2
C766	4030017460	S.CER ECJ0EB1E102K	T	14.4/20.3
C767	4030017460	S.CER ECJ0EB1E102K	T	14.4/19.4
C768	4030017460	S.CER ECJ0EB1E102K	T	14.4/18.4
C777	4030017460	S.CER ECJ0EB1E102K	T	7.1/29.9
C779	4030017460	S.CER ECJ0EB1E102K	T	7.1/28.9
C780	4030017460	S.CER ECJ0EB1E102K	T	7.1/27.9
C781	4030017460	S.CER ECJ0EB1E102K	T	5.4/24.3
C789	4030017460	S.CER ECJ0EB1E102K	T	7.1/18.5
C790	4030017460	S.CER ECJ0EB1E102K	B	6.4/30.8
C792	4030017400	S.CER ECJ0EC1H220J	T	28.4/25
C800	4030017460	S.CER ECJ0EB1E102K	B	34.8/23.9
C801	4030017460	S.CER ECJ0EB1E102K	B	34.8/20.3
C802	4030017460	S.CER ECJ0EB1E102K	B	33.5/11.6
C803	4030017460	S.CER ECJ0EB1E102K	B	29.4/13
C804	4030017460	S.CER ECJ0EB1E102K	B	31.8/4.8
C805	4030018910	S.CER C1608 JB 0J 475K-T	T	30.8/5.4
C808	4030017460	S.CER ECJ0EB1E102K	T	30.7/18.4
C810	4550006250	S.TAN TEESVA 1A 106M8R	T	27/7.1
C812	4030017460	S.CER ECJ0EB1E102K	T	34.4/13.2
C813	4030017460	S.CER ECJ0EB1E102K	T	34.4/17.6
C814	4030017460	S.CER ECJ0EB1E102K	T	34.4/18.5
C815	4030017460	S.CER ECJ0EB1E102K	T	32.8/5.4
C816	4030017430	S.CER ECJ0EC1H101J	B	33.2/21.2
C1010	4030017460	S.CER ECJ0EB1E102K	T	29.7/33.6
J700	6510025880	CON TC38-108-01 <CFE>		
J701	6450000131	CON HSJ1102-018540		
J702	6510022472	S.CON 40FLT-SM2-TB(LF)(SN)(M)	T	10.7/26.6
J703	6510022881	S.CON AXK5S30347YG	B	23.1/9.4
S700	2260002840	SWI SKHLLFA010		
S701	2260002840	SWI SKHLLFA010		
EP100	6910018460	S.BEA MMZ1005Y102C-T	T	49.8/26.4
EP450	6910018460	S.BEA MMZ1005Y102C-T	T	48.5/5.3
EP500	6910018460	S.BEA MMZ1005Y102C-T	B	43.7/6.5
EP701	6910018460	S.BEA MMZ1005Y102C-T	B	29.5/45.3
EP702	6910014680	S.BEA MMZ1608Y 121BT	B	26/46.5
EP704	6910018460	S.BEA MMZ1005Y102C-T	B	17.6/46.3
EP705	6910018460	S.BEA MMZ1005Y102C-T	B	19.9/47.5
EP706	6910018460	S.BEA MMZ1005Y102C-T	T	6.4/44.6
EP707	6910014680	S.BEA MMZ1608Y 121BT	B	27.2/44.3
EP750	6910018460	S.BEA MMZ1005Y102C-T	T	13.7/35.4
EP751	6910018460	S.BEA MMZ1005Y102C-T	T	14.1/29.7
EP752	6910018460	S.BEA MMZ1005Y102C-T	T	14.1/28.8
EP755	6910018460	S.BEA MMZ1005Y102C-T	T	15.7/33.6
EP756	6910018460	S.BEA MMZ1005Y102C-T	T	8.1/33.8
EP757	6910018460	S.BEA MMZ1005Y102C-T	T	6.6/31.4
EP758	6910018460	S.BEA MMZ1005Y102C-T	T	7.5/31.4
EP759	6910018460	S.BEA MMZ1005Y102C-T	T	8.2/25.8
EP760	6910018460	S.BEA MMZ1005Y102C-T	T	7.1/23.7

[LOGIC UNIT]

REF NO.	PARTS NO.	DESCRIPTION	M.	H/V LOCATION
IC1	1140015090	S.IC HD64F2364VTE34V	T	20.6/29.2
IC3	1130014260	S.IC SN74LVC2GU04DCKR	T	20.7/12.1
IC51	1140012950	S.IC 24LC512T-I/SM <SEI>	B	13.3/45.5
IC52	1120003020	S.IC MAX3221IPWR	T	16.6/42.8
IC100	1110007430	S.IC S-812C33AUA-C2N-T2 G	B	24.7/21.7
IC101	1110007440	S.IC S-80929CNMC-G8Z-T2 G	T	13/11.9
IC102	1190002120	S.IC XC9201D09AKR	B	87.2/44
IC103	1180002590	S.REG XC6204B332MR	T	54.8/43.4
IC104	1110006520	S.IC LMV331IDCKR	B	86.8/21.1
IC125	1110006930	S.IC XC6371A551PR	T	37/33.6
IC300	1110005310	S.IC AN6123MS	B	34.8/35.4
IC301	1130009981	S.IC TC7W53FK(TE85L,F)	B	36.4/41.4
IC302	1110006470	S.IC LMV324IPWR	B	37.2/26.1
IC303	1130009981	S.IC TC7W53FK(TE85L,F)	B	29.9/27
IC400	1110001811	S.IC TA7368FG(5,ER)	B	52.7/19.9
IC500	1130013440	S.IC SN74LVC2G74DCTR	B	62.9/15.8
IC501	1110005430	S.IC CMX589AD5/TR	B	45.8/39.5
IC502	1130007021	S.IC TC7S66FU(TE85L,F)	B	41.7/33.3
IC503	1130011631	S.IC AD73311ARSZ <FE>	B	68.4/40.9
IC504	1110005290	S.IC NJM2115V-TE1-#ZZZB	B	52.5/47.3
IC505	1130011930	S.IC SN74LVC1G04DCKR	B	79.8/19.1
IC506	1130010920	S.IC AMBE-2020	B	70.2/27.5
IC507	1110006090	S.IC XC6202P502PR	T	65.2/42.2
IC508	1180002590	S.REG XC6204B332MR	T	65.5/32.9
IC603	1130014930	S.IC LC75827W-E	B	17.2/32
Q50	1530004000	S.TRA 2SC4738-GR(TE85L,F)	T	17.7/9.7
Q51	1540000661	S.TRA 2SD2216GSL	T	25.1/12.9
Q52	1540000661	S.TRA 2SD2216GSL	T	27.1/43.6
Q53	1510001100	S.TRA 2SA1832-GR(TE85R,F)	T	22.3/15.9
Q101	1550000090	S.FET RSQ035P03TR	B	85.3/48.3
Q102	1590003231	S.TRA UNR9113G0L	B	88.4/25.1
Q103	1590003291	S.TRA UNR9213G0L	B	90.5/25.1
Q150	1510000671	S.TRA 2SA1588-GR(TE85R, F)	B	83.6/6.5
Q151	1520000651	S.TRA 2SB1201S-TL-E	B	87.7/11.9
Q152	1590003291	S.TRA UNR9213G0L	T	47.7/21.1
Q153	1590001170	S.TRA XP1501-(TX).AB	T	43.4/22
Q200	1590003291	S.TRA UNR9213G0L	T	37.8/10.9
Q201	1590003291	S.TRA UNR9213G0L	T	35.8/10.9
Q202	1590003431	S.TRA UNR911HG0L	T	52.6/50
Q203	1510001100	S.TRA 2SA1832-GR(TE85R,F)	T	3.1/28.8
Q300	1510001100	S.TRA 2SA1832-GR(TE85R,F)	B	28.9/45.7
Q301	1590003291	S.TRA UNR9213G0L	B	41.1/49.3
Q302	1590003231	S.TRA UNR9113G0L	B	30.7/43.1
Q303	1590001410	S.TRA XP1215(TX)	B	33.2/49.4
Q304	1530004000	S.TRA 2SC4738-GR(TE85L,F)	B	36.5/44.3
Q305	1590003291	S.TRA UNR9213G0L	B	29/38.4
Q306	1590001770	S.TRA XP1213(TX)	B	44.4/22
Q309	1590003291	S.TRA UNR9213G0L	B	29.5/31.5
Q400	1520000651	S.TRA 2SB1201S-TL-E	B	53.6/13.4
Q401	1590001170	S.TRA XP1501-(TX).AB	B	33.4/3.6
Q402	1510000671	S.TRA 2SA1588-GR(TE85R, F)	B	57.1/8.8
Q403	1560001330	S.FET RSR025N03	B	36.6/11.6
Q404	1560001330	S.FET RSR025N03	B	36.6/7.4
Q500	1530004000	S.TRA 2SC4738-GR(TE85L,F)	B	64.8/12.7
Q501	1590003291	S.TRA UNR9213G0L	B	48.5/44.9
Q502	1590003291	S.TRA UNR9213G0L	B	45.1/30.4
Q503	1590003291	S.TRA UNR9213G0L	B	50.6/26.4
Q504	1510001100	S.TRA 2SA1832-GR(TE85R,F)	B	49.9/31.8
Q505	1530004000	S.TRA 2SC4738-GR(TE85L,F)	B	79.3/15.6
Q506	1510001100	S.TRA 2SA1832-GR(TE85R,F)	B	47.5/31.1
Q507	1590001170	S.TRA XP1501-(TX).AB	B	47.5/28.7
D1	1790001200	S.DIO MA6S121(TX)	T	64.5/26.4
D2	1790001251	S.DIO MA2S1110GL [EUR]	T	58.4/18.9
	1790001251	S.DIO MA2S1110GL [USA]		
	1790001251	S.DIO MA2S1110GL [FRA]		
	1790001251	S.DIO MA2S1110GL [SEA]		
	1790001251	S.DIO MA2S1110GL [CHN]		
	1790001251	S.DIO MA2S1110GL [KOR]		
	1790001251	S.DIO MA2S1110GL [EXP]		
D3	1790001251	S.DIO MA2S1110GL [UK]	T	59.7/18.9
	1790001251	S.DIO MA2S1110GL [FRA]		
	1790001251	S.DIO MA2S1110GL [SEA]		
	1790001251	S.DIO MA2S1110GL [CHN]		
	1790001251	S.DIO MA2S1110GL [AUS]		
	1790001251	S.DIO MA2S1110GL [EXP]		
D4	1790000851	S.DIO MA3S132EGL [EUR]	B	76.1/38.8
	1790000851	S.DIO MA3S132EGL [UK]		
	1790000851	S.DIO MA3S132EGL [ITR]		
	1790000851	S.DIO MA3S132EGL [USA]		
	1790000851	S.DIO MA3S132EGL [FRA]		
	1790000851	S.DIO MA3S132EGL [KOR]		
	1790000851	S.DIO MA3S132EGL [AUS]		
D6	1790001251	S.DIO MA2S1110GL [ITR]	B	79/38.8
	1790001251	S.DIO MA2S1110GL [FRA]		
	1790001251	S.DIO MA2S1110GL [KOR]		
D11	1790001251	S.DIO MA2S1110GL [ITR]	T	56.8/23.8
	1790001251	S.DIO MA2S1110GL [USA]		
	1790001251	S.DIO MA2S1110GL [SEA]		
	1790001251	S.DIO MA2S1110GL [CHN]		
	1790001251	S.DIO MA2S1110GL [AUS]		
	1790001251	S.DIO MA2S1110GL [EXP]		
D12	1790001251	S.DIO MA2S1110GL [FRA]	T	55.6/23.8
	1790001251	S.DIO MA2S1110GL [KOR]		
D13	1790001261	S.DIO MA2S077G0L	T	17.3/17.9
D50	1790001241	S.DIO MA2S7280GL	T	17.5/12.8
D51	1790001251	S.DIO MA2S1110GL	T	20.3/17.3
D53	1730002301	S.ZEN MAZ8082GML	T	29.9/11.8
D54	1790001251	S.DIO MA2S1110GL	T	27.9/10.9
D100	1750000731	S.DIO MA2SD100GL	B	21/20.1
D102	1750001630	S.DIO RB161VA-20TR	B	85.8/41.2
D103	1790001241	S.DIO MA2S7280GL	B	85.7/24.5

M.=Mounted side (T: Mounted on the Top side, B: Mounted on the Bottom side)
S.=Surface mount

[LOGIC UNIT]

REF NO.	PARTS NO.	DESCRIPTION	M.	H/V LOCATION
D125	1750000880	S.DIO RB551V-30TE-17	T	37.8/37
D150	1790000860	S.DIO MA133(TX)	T	42/18.1
D151	1790000671	S.DIO SB07-03C-TB-E	T	38.7/17.3
D200	1790001251	S.DIO MA2S1110GL	T	37.1/13.5
D300	1790001810	S.VAR AVR-M1005C080MTABB	B	40.3/47.4
D500	1790001241	S.DIO MA2S7280GL	B	80.7/25.7
X1	6050012730	S.XTA CR-864(SMD-49/12.288 MHz) <JJE>	B	16.8/16.6
X500	6050012850	S.XTA CR-877 TTS18NSE-A11 9.8304 MHz	B	69.4/11
X501	6050012840	S.XTA CR-876 TTS18NSE-A11 16.384 MHz	B	78.2/11
L100	6190001561	S.COI CDRH5D18NP-101NCI	T	41.3/41
L101	6190001571	S.COI CDRH5D28NP-101NCI 100U	B	87.6/33.8
R1	7410001130	S.ARR EXB28V102JX	T	26.8/21
R2	7410001130	S.ARR EXB28V102JX	T	25.1/19.2
R4	7030009160	S.RES ERJ2GEJ 181 X (180)	T	11.4/19.6
R8	7030005240	S.RES ERJ2GEJ 473 X (47K)	T	29.6/24.4
R9	7030005530	S.RES ERJ2GEJ 100 X (10)	T	15.9/20.6
R10	7030005160	S.RES ERJ2GEJ 105 X (1M)	T	15.9/19.7
R11	7030008010	S.RES ERJ2GEJ 123 X (12K)	T	16.4/15.6
R12	7030005530	S.RES ERJ2GEJ 100 X (10)	T	11.5/14.1
R14	7030008010	S.RES ERJ2GEJ 123 X (12K)	T	15.9/17.9
R16	7030008010	S.RES ERJ2GEJ 123 X (12K)	T	30.6/34
R20	7030005040	S.RES ERJ2GEJ 472 X (4.7K)	T	16.7/39.2
R21	7410001250	S.ARR EXB28V472JX	T	30/22.6
R22	7030010040	S.RES ERJ2GEJ-JPW	T	12.5/18
R26	7030004980	S.RES ERJ2GEJ 101 X (100)	T	18.6/17.5
R28	7030010040	S.RES ERJ2GEJ-JPW	T	14.3/39
R50	7030005120	S.RES ERJ2GEJ 102 X (1K)	T	18.9/15.5
R51	7030005090	S.RES ERJ2GEJ 104 X (100K)	T	19.5/10.2
R52	7030005090	S.RES ERJ2GEJ 104 X (100K)	T	18.8/12.4
R53	7030005240	S.RES ERJ2GEJ 473 X (47K)	B	9.9/45.3
R54	7030005040	S.RES ERJ2GEJ 472 X (4.7K)	B	9/45.3
R55	7030005240	S.RES ERJ2GEJ 473 X (47K)	T	23.5/17.4
R56	7030005120	S.RES ERJ2GEJ 102 X (1K)	T	24.4/15.1
R57	7030005240	S.RES ERJ2GEJ 473 X (47K)	T	27.6/12.7
R58	7030005050	S.RES ERJ2GEJ 103 X (10K)	T	28.5/12.7
R60	7030005090	S.RES ERJ2GEJ 104 X (100K)	T	29.4/43.6
R62	7030004980	S.RES ERJ2GEJ 101 X (100)	T	23/48.5
R63	7030004980	S.RES ERJ2GEJ 101 X (100)	T	12.1/43.1
R66	7510001770	S.THE NTCG10 4LH 473JT	T	17.7/15.1
R67	7030005840	S.RES RR0510P-473-D (47K)	T	17.7/16
R68	7030005050	S.RES ERJ2GEJ 103 X (10K)	T	20.7/16
R69	7030008010	S.RES ERJ2GEJ 123 X (12K)	T	18.7/11.2
R70	7030008290	S.RES ERJ2GEJ 183 X (18K)	T	19.8/16
R71	7030005240	S.RES ERJ2GEJ 473 X (47K)	T	22.4/13.2
R100	7030005090	S.RES ERJ2GEJ 104 X (100K)	T	13.2/14.1
R101	7030011930	S.RES RP1005S-R56-F (0.56)	B	82.6/49.6
R102	7030011930	S.RES RP1005S-R56-F (0.56)	B	82.6/48.7
R105	7030005050	S.RES ERJ2GEJ 103 X (10K)	B	90/46.1
R107	7030007340	S.RES ERJ2GEJ 153 X (15K)	B	80.9/48.5
R108	7030010040	S.RES ERJ2GEJ-JPW	B	88.6/22.3
R110	7030005240	S.RES ERJ2GEJ 473 X (47K)	B	89.6/19
R111	7030007320	S.RES ERJ2GEJ 225 X (2.2M)	B	87.4/22.8
R112	7030005230	S.RES ERJ2GEJ 334 X (330K)	B	85.8/22.8
R113	7030007320	S.RES ERJ2GEJ 225 X (2.2M)	B	86.3/19.1
R114	7030005160	S.RES ERJ2GEJ 105 X (1M)	B	84.8/18.6
R115	7030008270	S.RES RR0510P-104-D (100K)	B	88.6/40.8
R116	7030005830	S.RES RR0510P-223-D (22K)	B	89.8/41.3
R117	7030007310	S.RES ERJ2GEJ 155 X (1.5M)	B	84.8/19.5
R136	7030007250	S.RES ERJ2GEJ 220 X (22)	T	49.5/43.7
R150	7030003210	S.RES ERJ3GEYJ 120 V (12)	B	85.5/5.9
R151	7030003220	S.RES ERJ3GEYJ 150 V (15)	B	86.7/5.9
R152	7030003210	S.RES ERJ3GEYJ 120 V (12)	B	80.4/4.8
R153	7030003210	S.RES ERJ3GEYJ 120 V (12)	B	81.6/4.8
R154	7030005120	S.RES ERJ2GEJ 102 X (1K)	B	84.2/4.6
R155	7030005120	S.RES ERJ2GEJ 102 X (1K)	T	45.4/22.4
R156	7030010990	S.RES RR0510P-272-D (2.7K)	T	41.7/21.9
R157	7030006000	S.RES RR0510P-222-D (2.2K)	T	41.5/23.1
R158	7030007280	S.RES ERJ2GEJ 331 X (330)	T	43.1/23.9
R161	7030005820	S.RES RR0510P-103-D (10K)	T	41.5/24
R203	7030007280	S.RES ERJ2GEJ 331 X (330)	T	38.8/13
R204	7030007280	S.RES ERJ2GEJ 331 X (330)	T	39.7/12.3
R205	7030008280	S.RES ERJ2GEJ 271 X (270)	T	56.2/47.5
R206	7030004990	S.RES ERJ2GEJ 221 X (220)	T	58/46.6
R207	7030007280	S.RES ERJ2GEJ 331 X (330)	T	59.9/46.6
R208	7030008280	S.RES ERJ2GEJ 271 X (270)	T	61.1/47
R209	7030008280	S.RES ERJ2GEJ 271 X (270)	T	59/46.6
R210	7030007280	S.RES ERJ2GEJ 331 X (330)	T	62.8/47.5
R211	7030007280	S.RES ERJ2GEJ 331 X (330)	T	67.5/48.4
R212	7030007280	S.RES ERJ2GEJ 331 X (330)	T	57.1/46.9
R213	7030007260	S.RES ERJ2GEJ 330 X (33)	T	3.7/24.8
R214	7030007260	S.RES ERJ2GEJ 330 X (33)	T	3.7/26.7
R215	7030007260	S.RES ERJ2GEJ 330 X (33)	T	3.8/32.4
R217	7030005050	S.RES ERJ2GEJ 103 X (10K)	T	3.3/30.7
R218	7030005120	S.RES ERJ2GEJ 102 X (1K)	T	2.4/30.7
R219	7030005530	S.RES ERJ2GEJ 100 X (10)	T	52.9/48.5
R300	7030005000	S.RES ERJ2GEJ 471 X (470)	B	28.3/42.6
R301	7030005050	S.RES ERJ2GEJ 103 X (10K)	B	30.3/46.6
R302	7030005120	S.RES ERJ2GEJ 102 X (1K)	B	28.7/49.1
R303	7030005110	S.RES ERJ2GEJ 224 X (220K)	B	26.3/43.8
R304	7030007290	S.RES ERJ2GEJ 222 X (2.2K)	B	28.8/50.6
R305	7030005060	S.RES ERJ2GEJ 333 X (33K)	B	41.2/47.4
R306	7030005120	S.RES ERJ2GEJ 102 X (1K)	B	42.1/47.4
R307	7030005040	S.RES ERJ2GEJ 472 X (4.7K)	B	34.6/45.9
R308	7030008400	S.RES ERJ2GEJ 182 X (1.8K)	B	33.8/47.1
R309	7030008400	S.RES ERJ2GEJ 182 X (1.8K)	B	32.9/47.1
R310	7030004980	S.RES ERJ2GEJ 101 X (100)	B	32.5/44.5

[LOGIC UNIT]

REF NO.	PARTS NO.	DESCRIPTION	M.	H/V LOCATION
R311	7030007300	S.RES ERJ2GEJ 332 X (3.3K)	B	33.4/44.5
R312	7030005080	S.RES ERJ2GEJ 823 X (82K)	B	34.6/44.1
R314	7030005120	S.RES ERJ2GEJ 102 X (1K)	B	37.9/45.5
R315	7030010040	S.RES ERJ2GEJ-JPW	B	38/43.9
R316	7030005030	S.RES ERJ2GEJ 152 X (1.5K)	B	34.7/38.7
R317	7030008410	S.RES ERJ2GEJ 392 X (3.9K)	B	33.5/39.2
R318	7030005070	S.RES ERJ2GEJ 683 X (68K)	B	36.3/39.6
R319	7030005050	S.RES ERJ2GEJ 103 X (10K)	B	27.9/35.5
R320	7030007340	S.RES ERJ2GEJ 153 X (15K)	B	28.3/34.3
R321	7030005010	S.RES ERJ2GEJ 681 X (680)	B	31/35.2
R322	7030005040	S.RES ERJ2GEJ 472 X (4.7K)	B	29.7/34
R323	7030010040	S.RES ERJ2GEJ-JPW	B	37.1/32.8
R325	7030005240	S.RES ERJ2GEJ 473 X (47K)	B	31.5/38.6
R326	7030008300	S.RES ERJ2GEJ 184 X (180K)	B	35.9/32.3
R327	7030005160	S.RES ERJ2GEJ 105 X (1M)	B	37/36.4
R328	7030007340	S.RES ERJ2GEJ 153 X (15K)	B	34.7/31
R329	7030005100	S.RES ERJ2GEJ 154 X (150K)	B	42.4/24.4
R330	7030005000	S.RES ERJ2GEJ 471 X (470)	B	40.3/22.8
R331	7030009140	S.RES ERJ2GEJ 272 X (2.7K)	B	40.3/21.8
R333	7030005080	S.RES ERJ2GEJ 823 X (82K)	B	38.7/22.8
R334	7030005070	S.RES ERJ2GEJ 683 X (68K)	B	35.5/22.8
R335	7030007350	S.RES ERJ2GEJ 393 X (39K)	B	37.1/22.8
R336	7030005080	S.RES ERJ2GEJ 823 X (82K)	B	39.5/20.9
R337	7030007350	S.RES ERJ2GEJ 393 X (39K)	B	39.3/19.4
R338	7030005050	S.RES ERJ2GEJ 103 X (10K)	B	31.7/30.1
R339	7030007350	S.RES ERJ2GEJ 393 X (39K)	B	32.1/32
R340	7030008410	S.RES ERJ2GEJ 392 X (3.9K)	B	33/32
R341	7030007290	S.RES ERJ2GEJ 222 X (2.2K)	B	32.5/24.6
R342	7030007290	S.RES ERJ2GEJ 222 X (2.2K)	B	32.5/23.7
R343	7030005030	S.RES ERJ2GEJ 152 X (1.5K)	B	29.2/24.1
R344	7030008300	S.RES ERJ2GEJ 184 X (180K)	B	32.8/27.5
R345	7030005090	S.RES ERJ2GEJ 104 X (100K)	B	34/28.7
R346	7030005090	S.RES ERJ2GEJ 104 X (100K)	B	37/29.6
R347	7030005090	S.RES ERJ2GEJ 104 X (100K)	B	47.7/34.6
R348	7030005110	S.RES ERJ2GEJ 224 X (220K)	B	37.9/29.6
R349	7030007340	S.RES ERJ2GEJ 153 X (15K)	B	39.7/29.6
R350	7030007340	S.RES ERJ2GEJ 153 X (15K)	B	38.8/29.6
R351	7030004980	S.RES ERJ2GEJ 101 X (100)	B	43.6/24.2
R352	7030005120	S.RES ERJ2GEJ 102 X (1K)	B	26.7/42.6
R353	7030005240	S.RES ERJ2GEJ 473 X (47K)	B	30.6/36.4
R400	7030000170	S.RES MCR10EZHJ 18 (180)	B	52.8/7.8
R401	7030000040	S.RES MCR10EZHJ 1.5 (1R5)	B	55.2/6.6
R402	7030005040	S.RES ERJ2GEJ 472 X (4.7K)	B	55.1/8
R403	7030005160	S.RES ERJ2GEJ 105 X (1M)	B	26.3/3.9
R404	7030005600	S.RES ERJ2GEJ 273 X (27K)	B	26.3/3
R405	7030005120	S.RES ERJ2GEJ 102 X (1K)	B	30.5/3.4
R406	7030005220	S.RES ERJ2GEJ 223 X (22K)	B	32.3/5.6
R407	7030009710	S.RES ERJ2GEJ 203 X (20K)	B	33.5/5.3
R408	7030005030	S.RES ERJ2GEJ 152 X (1.5K)	B	32.2/34.7
R409	7030005050	S.RES ERJ2GEJ 103 X (10K)	B	31.8/37
R410	7030005220	S.RES ERJ2GEJ 223 X (22K)	B	48.4/19.5
R412	7030007260	S.RES ERJ2GEJ 330 X (33)	B	56.9/21.2
R413	7030005530	S.RES ERJ2GEJ 100 X (10)	B	57.3/17
R414	7030005120	S.RES ERJ2GEJ 102 X (1K)	B	34.2/12.9
R415	7030000170	S.RES MCR10EZHJ 18 (180)	B	51.1/7.8
R416	7030005120	S.RES ERJ2GEJ 102 X (1K)	B	37.6/5.3
R501	7030005120	S.RES ERJ2GEJ 102 X (1K)	B	65.3/15.1
R502	7030005090	S.RES ERJ2GEJ 104 X (100K)	B	65.3/14.2
R503	7030004990	S.RES ERJ2GEJ 221 X (220)	B	64.9/11.2
R504	7030004980	S.RES ERJ2GEJ 101 X (100)	B	66/17.3
R505	7030010040	S.RES ERJ2GEJ-JPW	B	61.4/12.2
R506	7410001140	S.ARR EXB28V104JX	B	51.4/40.2
R510	7030005090	S.RES ERJ2GEJ 104 X (100K)	B	51.5/42
R511	7030005090	S.RES ERJ2GEJ 104 X (100K)	B	44.1/44.4
R512	7030005090	S.RES ERJ2GEJ 104 X (100K)	B	43.8/46.8
R513	7030006610	S.RES ERJ2GEJ 394 X (390K)	B	40.8/36.1
R514	7030005240	S.RES ERJ2GEJ 473 X (47K)	B	42.8/31.4
R515	7030005220	S.RES ERJ2GEJ 223 X (22K)	B	45/34.6
R516	7030005050	S.RES ERJ2GEJ 103 X (10K)	B	51.7/30.7
R517	7030005050	S.RES ERJ2GEJ 103 X (10K)	B	50/30.2
R518	7030005530	S.RES ERJ2GEJ 100 X (10)	B	50.8/33.1
R519	7030005240	S.RES ERJ2GEJ 473 X (47K)	B	75.7/42.9
R520	7030005090	S.RES ERJ2GEJ 104 X (100K)	B	46.4/44.6
R521	7030005170	S.RES ERJ2GEJ 474 X (470K)	B	48.2/47.1
R522	7030005240	S.RES ERJ2GEJ 473 X (47K)	B	47/46.9
R523	7030005240	S.RES ERJ2GEJ 473 X (47K)	B	56/45.6
R524	7030005090	S.RES ERJ2GEJ 104 X (100K)	B	57.8/47.1
R525	7030004980	S.RES ERJ2GEJ 101 X (100)	B	54.7/49.8
R526	7030005240	S.RES ERJ2GEJ 473 X (47K)	B	57.8/46
R527	7030005010	S.RES ERJ2GEJ 681 X (680)	B	62.1/38.5
R528	7030005120	S.RES ERJ2GEJ 102 X (1K)	B	63.3/38.2
R530	7030004980	S.RES ERJ2GEJ 101 X (100)	B	75.8/12.8
R531	7030005120	S.RES ERJ2GEJ 102 X (1K)	B	77.8/15.2
R532	7030005090	S.RES ERJ2GEJ 104 X (100K)	B	78.7/17.3
R533	7030004990	S.RES ERJ2GEJ 221 X (220)	B	78/13.6
R534	7030007280	S.RES ERJ2GEJ 331 X (330)	B	80.4/22.5
R535	7030005120	S.RES ERJ2GEJ 102 X (1K)	B	80.7/23.7
R536	7030005240	S.RES ERJ2GEJ 473 X (47K)	B	79.2/23.3
R537	7030005040	S.RES ERJ2GEJ 472 X (4.7K)	B	48.2/26
R538	7030000180	S.RES MCR10EZHJ 22 (220)	T	64.3/36.2
R539	7030005240	S.RES ERJ2GEJ 473 X (47K)	T	64.8/29.6
R540	7030005090	S.RES ERJ2GEJ 104 X (100K)	B	71.6/50.1
R601	7030005120	S.RES ERJ2GEJ 102 X (1K)	B	24/5.4
R602	7030005120	S.RES ERJ2GEJ 102 X (1K)	B	8.4/9.2
R603	7030005120	S.RES ERJ2GEJ 102 X (1K)	B	8.4/8.3
R604	7030008370	S.RES ERJ2GEJ 561 X (560)	B	8.4/6.5
R605	7030004980	S.RES ERJ2GEJ 101 X (100)	B	20.9/5.9
R606	7030005120	S.RES ERJ2GEJ 102 X (1K)	B	8.4/7.4
R608	7030010040	S.RES ERJ2GEJ-JPW	B	49.6/29
R609	7030004980	S.RES ERJ2GEJ 101 X (100)	B	20.9/5
R615	7030007350	S.RES ERJ2GEJ 393 X (39K)	B	21.2/40.7
R616	7030005240	S.RES ERJ2GEJ 473 X (47K)	B	17.1/39.4
R617	7030005240	S.RES ERJ2GEJ 473 X (47K)	B	18.2/40.3
R618	7030005240	S.RES ERJ2GEJ 473 X (47K)	B	19.8/41.6
R619	7030005240	S.RES ERJ2GEJ 473 X (47K)	B	20.3/39.7

M.=Mounted side (T: Mounted on the Top side, B: Mounted on the Bottom side)
S.=Surface mount

[LOGIC UNIT]

REF NO.	PARTS NO.	DESCRIPTION	M.	H/V LOCATION
R620	7030005050	S.RES ERJ2GEJ 103 X (10K)	B	16.6/40.3
R621	7030005070	S.RES ERJ2GEJ 683 X (68K)	B	23.9/37.1
R622	7030005310	S.RES ERJ2GEJ 124 X (120K)	B	23/37.1
R624	7030010040	S.RES ERJ2GEJ-JPW	B	23/39.5
C1	4030016930	S.CER ECJ0EB1A104K	T	12.7/20.1
C2	4030016930	S.CER ECJ0EB1A104K	T	15.5/15.6
C3	4030016930	S.CER ECJ0EB1A104K	B	22.1/40.7
C4	4030016930	S.CER ECJ0EB1A104K	T	22.3/18.4
C5	4030017460	S.CER ECJ0EB1E102K	T	29.1/14.7
C6	4030017460	S.CER ECJ0EB1E102K	T	29.1/15.6
C7	4030017460	S.CER ECJ0EB1E102K	T	29.1/19.4
C8	4030017460	S.CER ECJ0EB1E102K	T	29.1/18.3
C9	4030017460	S.CER ECJ0EB1E102K	T	29.1/17.4
C10	4030017460	S.CER ECJ0EB1E102K	T	29.1/16.5
C11	4030016930	S.CER ECJ0EB1A104K	T	29.1/20.3
C12	4030016930	S.CER ECJ0EB1A104K	T	30.6/35.6
C13	4030017390	S.CER ECJ0EC1H180J	T	14.3/19.7
C14	4030017630	S.CER ECJ0EC1H120J	T	14.3/18.8
C15	4030017650	S.CER ECJ0EC1H270J	T	15.9/18.8
C16	4030016930	S.CER ECJ0EB1A104K	T	15.9/16.9
C32	4550007720	S.TAN TEESVP 0G 476M8R	B	22/42.3
C33	4030016930	S.CER ECJ0EB1A104K	T	15.5/38.3
C50	4030016930	S.CER ECJ0EB1A104K	T	19.5/9.3
C52	4030017460	S.CER ECJ0EB1E102K	B	10.6/40.9
C53	4030017460	S.CER ECJ0EB1E102K	T	25.6/15.5
C54	4030017460	S.CER ECJ0EB1E102K	T	25.6/14.6
C55	4030017460	S.CER ECJ0EB1E102K	T	26.7/12.7
C56	4030017460	S.CER ECJ0EB1E102K	T	24.3/10.7
C57	4030016930	S.CER ECJ0EB1A104K	T	12.1/41
C58	4030017460	S.CER ECJ0EB1E102K	T	27.2/45.1
C60	4030011810	S.CER C1608 JB 1A 224K-T	T	21.5/41.8
C61	4030011810	S.CER C1608 JB 1A 224K-T	T	22.8/41.8
C62	4030011810	S.CER C1608 JB 1A 224K-T	T	21.5/44.5
C63	4030011810	S.CER C1608 JB 1A 224K-T	T	22.8/44.5
C67	4030017620	S.CER ECJ0EC1H100C	T	19.2/49.9
C68	4030017620	S.CER ECJ0EC1H100C	T	23.9/50.1
C100	4030011600	S.CER C1608 JB 1E 104K-T	B	26.8/24.5
C101	4030017030	S.CER ECJ0EB1A273K	T	14.4/9.7
C102	4030016930	S.CER ECJ0EB1A104K	B	25.5/17.3
C103	4030019460	S.CER C1608 JB 0J 106M-T	B	25.1/18.5
C104	4550007940	S.TAN TCP0J226M8R	T	47.8/43.7
C105	4550007940	S.TAN TCP0J226M8R	T	46/43.7
C106	4550007940	S.TAN TCP0J226M8R	T	37.8/29.8
C107	4550007940	S.TAN TCP0J226M8R	T	39.4/26
C108	4030019320	S.CER C1608 X7R 1C 105K-T	B	80.7/50.4
C109	4510007980	S.ELE 16SVP22M-AIC	B	35.6/17.7
C110	4030017440	S.CER ECJ0EC1H221J	B	88.8/46.2
C111	4550007880	S.TAN TEESVB2 1A 686M8R	B	87.9/38.7
C112	4030018560	S.CER C2012 JB 1A 475K-T	B	85.8/29.7
C113	4030018860	S.CER ECJ0EB0J105K	T	52.4/45.4
C114	4030017460	S.CER ECJ0EB1E102K	T	52.4/46.3
C115	4030017460	S.CER ECJ0EB1E102K	B	90.8/18.6
C116	4030017490	S.CER C1608 JB 1A 105K-T	T	52.5/43.6
C117	4030017460	S.CER ECJ0EB1E102K	T	51.1/43.7
C118	4030016930	S.CER ECJ0EB1A104K	B	80.9/49.4
C119	4030017400	S.CER ECJ0EC1H220J	B	86.9/50.6
C120	4030017700	S.CER ECJ0EC1H151J	B	88.6/41.7
C121	4030016790	S.CER ECJ0EB1C103K	B	88.6/20.5
C123	4030017460	S.CER ECJ0EB1E102K	B	90.3/29.7
C124	4030016930	S.CER ECJ0EB1A104K	B	89.4/29.7
C150	4030017460	S.CER ECJ0EB1E102K	B	86.4/3.8
C151	4030017460	S.CER ECJ0EB1E102K	T	49.3/21.2
C152	4030017460	S.CER ECJ0EB1E102K	T	45.4/23.3
C214	4030017460	S.CER ECJ0EB1E102K	T	37.6/12.4
C215	4030017460	S.CER ECJ0EB1E102K	T	35.9/12.4
C216	4030017460	S.CER ECJ0EB1E102K	T	38.3/14.6
C217	4030017460	S.CER ECJ0EB1E102K	T	51.1/50.1
C219	4030017460	S.CER ECJ0EB1E102K	T	56/49.1
C220	4030017460	S.CER ECJ0EB1E102K	T	2.8/24.8
C221	4030017460	S.CER ECJ0EB1E102K	T	2.4/32.4
C222	4030017460	S.CER ECJ0EB1E102K	T	2.3/26.5
C223	4550007940	S.TAN TCP0J226M8R	T	54.6/49.7
C300	4030018860	S.CER ECJ0EB0J105K	B	28.2/43.8
C301	4030017460	S.CER ECJ0EB1E102K	B	28.7/47.3
C302	4030017460	S.CER ECJ0EB1E102K	B	28.7/48.2
C303	4030016950	S.CER ECJ0EB1A473K	B	27.3/43.8
C304	4030017460	S.CER ECJ0EB1E102K	B	32.1/42
C305	4030016790	S.CER ECJ0EB1C103K	B	31.6/44.5
C306	4030018860	S.CER ECJ0EB0J105K	B	34.7/47.1
C307	4030017460	S.CER ECJ0EB1E102K	B	35.6/47.1
C308	4030019460	S.CER C1608 JB 0J 106M-T	B	31.9/46.6
C309	4030016930	S.CER ECJ0EB1A104K	B	34.6/45
C310	4030019460	S.CER C1608 JB 0J 106M-T	B	39/45.2
C311	4030016930	S.CER ECJ0EB1A104K	B	34.3/42.8
C312	4030016930	S.CER ECJ0EB1A104K	B	34.7/39.6
C313	4030018860	S.CER ECJ0EB0J105K	B	37.9/39.6
C314	4030016930	S.CER ECJ0EB1A104K	B	30.6/34
C315	4030017770	S.CER ECJ0EB1E332K	B	28.8/35.5
C316	4030016790	S.CER ECJ0EB1C103K	B	29.7/36.3
C317	4030016930	S.CER ECJ0EB1A104K	B	33.9/37.8
C318	4030017460	S.CER ECJ0EB1E102K	B	30.6/38.6
C319	4030016930	S.CER ECJ0EB1A104K	B	34.7/32.8
C320	4030016790	S.CER ECJ0EB1C103K	B	36.2/37.6
C321	4030019460	S.CER C1608 JB 0J 106M-T	B	38/35.9
C322	4030017460	S.CER ECJ0EB1E102K	B	43.8/19.1
C324	4030017460	S.CER ECJ0EB1E102K	B	44.7/19.1
C325	4030016950	S.CER ECJ0EB1A473K	B	37.1/31.9
C326	4030018390	S.CER ECJ0EB1A563K	B	35.9/30.5
C327	4030017920	S.CER ECJ0EB1A683K	B	41.9/22.8
C328	4030018860	S.CER ECJ0EB0J105K	B	41.9/21.8
C329	4030017710	S.CER ECJ0EC1H181J	B	41.5/24.4
C330	4030017460	S.CER ECJ0EB1E102K	B	43.6/25.1
C331	4030018860	S.CER ECJ0EB0J105K	B	40.6/29.1

[LOGIC UNIT]

REF NO.	PARTS NO.	DESCRIPTION	M.	H/V LOCATION
C332	4030016790	S.CER ECJ0EB1C103K	B	41.5/26.5
C333	4550007940	S.TAN TCP0J226M8R	B	42.9/27.2
C334	4030018110	S.CER ECJ0EB1H272K	B	37.3/21.7
C335	4030018140	S.CER ECJ0EB1H391K	B	34.3/22.9
C336	4030019460	S.CER C1608 JB 0J 106M-T	B	41.6/20.5
C337	4030017920	S.CER ECJ0EB1A683K	B	31.2/31.3
C338	4030017040	S.CER ECJ0EB1A333K	B	30.9/32.5
C339	4030017460	S.CER ECJ0EB1E102K	B	28/32.2
C340	4030017040	S.CER ECJ0EB1A333K	B	32.8/25.8
C341	4030016960	S.CER ECJ0EB1C183K	B	30.1/24.1
C342	4030017460	S.CER ECJ0EB1E102K	B	29.4/28.8
C343	4030018860	S.CER ECJ0EB0J105K	B	32.8/29.1
C344	4030017460	S.CER ECJ0EB1E102K	B	30.6/25.3
C347	4030017460	S.CER ECJ0EB1E102K	B	37/34.7
C400	4030017460	S.CER ECJ0EB1E102K	B	38.1/10.1
C401	4030017460	S.CER ECJ0EB1E102K	B	55.5/5.2
C403	4030017460	S.CER ECJ0EB1E102K	B	26.3/4.9
C404	4030017460	S.CER ECJ0EB1E102K	B	28.7/3.4
C405	4030018860	S.CER ECJ0EB0J105K	B	29.6/3.4
C408	4030017460	S.CER ECJ0EB1E102K	B	46.4/14.3
C409	4030016930	S.CER ECJ0EB1A104K	B	31.8/36.1
C412	4550006250	S.TAN TEESVA 1A 106M8R	B	50/23.9
C413	4030016930	S.CER ECJ0EB1A104K	B	46.4/15.2
C414	4510009340	S.ELE EEEHA1C101WP	B	42.1/14.6
C415	4030016950	S.CER ECJ0EB1A473K	B	57.4/18.2
C416	4510009020	S.ELE EEE0JA331P	B	44.8/5.6
C417	4030017460	S.CER ECJ0EB1E102K	B	38.8/5
C418	4030017460	S.CER ECJ0EB1E102K	B	52.4/34.1
C420	4510008040	S.ELE EEFCD 0K 330R	B	30.3/18.6
C421	4030018520	S.CER C1608 JB 0J 225M-T	B	27.7/3.9
C422	4030017420	S.CER ECJ0EC1H470J	B	57.7/19.8
C423	4030016930	S.CER ECJ0EB1A104K	B	47.5/18.6
C500	4030016930	S.CER ECJ0EB1A104K	B	71.9/10.5
C501	4030017460	S.CER ECJ0EB1E102K	B	66.5/11.4
C503	4030017460	S.CER ECJ0EB1E102K	B	66.3/12.8
C504	4030016930	S.CER ECJ0EB1A104K	B	64.9/10.3
C505	4030016930	S.CER ECJ0EB1A104K	B	65.3/16.1
C506	4030017460	S.CER ECJ0EB1E102K	B	65.1/17.3
C507	4030017400	S.CER ECJ0EC1H220J	B	44.1/45.3
C508	4030018860	S.CER ECJ0EB0J105K	B	50.8/38.2
C509	4030017460	S.CER ECJ0EB1E102K	B	50.1/44.6
C510	4030016930	S.CER ECJ0EB1A104K	B	44.4/32.9
C511	4030016930	S.CER ECJ0EB1A104K	B	43.5/34.4
C512	4030017030	S.CER ECJ0EB1A273K	B	42.1/35.2
C513	4030017030	S.CER ECJ0EB1A273K	B	40.5/37.7
C514	4030017460	S.CER ECJ0EB1E102K	B	43.5/32.8
C515	4030016930	S.CER ECJ0EB1A104K	B	41/31.4
C516	4030017760	S.CER ECJ0EB1H222K	B	46.5/33.7
C517	4030016930	S.CER ECJ0EB1A104K	B	77.8/43.7
C518	4030016930	S.CER ECJ0EB1A104K	B	73.4/43.7
C519	4030018520	S.CER C1608 JB 0J 225M-T	B	75.2/44
C520	4030017420	S.CER ECJ0EC1H470J	B	79/43.7
C521	4030019460	S.CER C1608 JB 0J 106M-T	B	61.6/40.9
C522	4030016930	S.CER ECJ0EB1A104K	B	63/41.1
C523	4030016930	S.CER ECJ0EB1A104K	B	63.5/43.8
C524	4030016970	S.CER ECJ0EB1C223K	B	62.1/37.6
C525	4030016950	S.CER ECJ0EB1A473K	B	63.3/39.9
C526	4030016930	S.CER ECJ0EB1A104K	B	63.6/37
C527	4030016930	S.CER ECJ0EB1A104K	B	51.6/50.2
C528	4030018860	S.CER ECJ0EB0J105K	B	45.4/46.9
C529	4030016930	S.CER ECJ0EB1A104K	B	52.8/44.8
C530	4030016930	S.CER ECJ0EB1A104K	B	75.8/10.1
C531	4030016930	S.CER ECJ0EB1A104K	B	77.1/13.6
C532	4030017460	S.CER ECJ0EB1E102K	B	80.7/11
C534	4030017460	S.CER ECJ0EB1E102K	B	80.7/14.5
C535	4030016930	S.CER ECJ0EB1A104K	B	78.9/13.6
C536	4030016930	S.CER ECJ0EB1A104K	B	80.5/17.3
C537	4030016930	S.CER ECJ0EB1A104K	B	75.7/18.4
C538	4030016930	S.CER ECJ0EB1A104K	B	71.7/18.4
C539	4030016930	S.CER ECJ0EB1A104K	B	70.1/18.4
C540	4030016930	S.CER ECJ0EB1A104K	B	62.5/20.6
C541	4030016930	S.CER ECJ0EB1A104K	B	62.2/34.4
C542	4030016930	S.CER ECJ0EB1A104K	B	68.7/36.5
C543	4030016930	S.CER ECJ0EB1A104K	B	78.2/35.3
C544	4030016930	S.CER ECJ0EB1A104K	B	77/35.5
C545	4030016930	S.CER ECJ0EB1A104K	B	78.2/34.4
C546	4030017420	S.CER ECJ0EC1H470J	B	79.6/26.2
C547	4030017460	S.CER ECJ0EB1E102K	B	49.1/26
C548	4030018520	S.CER C1608 JB 0J 225M-T	B	47.1/26
C549	4030017460	S.CER ECJ0EB1E102K	B	46/26.4
C550	4030017460	S.CER ECJ0EB1E102K	B	50.8/29.3
C551	4030012610	S.CER C2012 JB 1C 474K-T	T	66.3/38.6
C552	4030018860	S.CER ECJ0EB0J105K	T	63.8/39.1
C553	4030018860	S.CER ECJ0EB0J105K	T	63.8/38.2
C554	4030018860	S.CER ECJ0EB0J105K	T	65.9/35.1
C555	4030018860	S.CER ECJ0EB0J105K	T	66.9/30.6
C556	4030016930	S.CER ECJ0EB1A104K	T	66/30.5
C557	4550007940	S.TAN TCP0J226M8R	T	66.8/36.5
C558	4030019460	S.CER C1608 JB 0J 106M-T	T	67.8/34.5
C603	4030017460	S.CER ECJ0EB1E102K	B	41.5/51.1
C606	4030017460	S.CER ECJ0EB1E102K	B	19.4/39.7
C607	4030016930	S.CER ECJ0EB1A104K	B	17.1/41.6
C608	4030016930	S.CER ECJ0EB1A104K	B	18/41.6
C609	4030016930	S.CER ECJ0EB1A104K	B	18.9/41.6
C610	4030016930	S.CER ECJ0EB1A104K	B	16.2/41.6
J1	6510025371	S.CON AXK816145WG	B	71.2/15.2
J2	6510027160	S.CON IMSA-9631S-48Y923	B	6.8/27
J50	6510024580	S.CON HSJ1621-019011	B	21.6/53.3
J600	6510024131	S.CON IMSA-9637S-40Y905	B	22.7/9.4
DS1	5030003210	LCD A01B010X 3155 LCD		
DS201	5040002670	S.LED CL-165HR/YG	T	36.5/5.1

M.=Mounted side (T: Mounted on the Top side, B: Mounted on the Bottom side)
S.=Surface mount

[LOGIC UNIT]

REF NO.	PARTS NO.	DESCRIPTION	M.	H/V LOCATION
DS202	5040003480	S.LED VFY1111C-4BX-4C-TR	T	54.1/11.1
DS203	5040003480	S.LED VFY1111C-4BX-4C-TR	T	69.1/13.1
DS204	5040003480	S.LED VFY1111C-4BX-4C-TR	T	77.5/22.7
DS205	5040003480	S.LED VFY1111C-4BX-4C-TR	T	77.3/39.9
DS206	5040003480	S.LED VFY1111C-4BX-4C-TR	T	84.3/14.1
DS207	5040003480	S.LED VFY1111C-4BX-4C-TR	T	84.8/31.3
DS208	5040003480	S.LED VFY1111C-4BX-4C-TR	T	83.8/48.5
DS209	5040003480	S.LED VFY1111C-4BX-4C-TR	T	42.6/5.1
DS210	5040003480	S.LED VFY1111C-4BX-4C-TR	T	5.6/39.5
DS211	5040003480	S.LED VFY1111C-4BX-4C-TR	T	5.6/26.7
DS212	5040003480	S.LED VFY1111C-4BX-4C-TR	T	5.6/14
MC300	7700002850	MIC EM6022P-65B-G <HOR>		
W1	7030012290	JUM RDS2T0R0		
EP50	6910018460	S.BEA MMZ1005Y102C-T	T	11.2/41
EP51	6910018460	S.BEA MMZ1005Y102C-T	T	23.9/48.5
EP52	6910018460	S.BEA MMZ1005Y102C-T	T	18.8/48.7
EP53	6910018460	S.BEA MMZ1005Y102C-T	T	23.5/51.7
EP100	6910018460	S.BEA MMZ1005Y102C-T	T	37.6/27.6
EP101	6910018460	S.BEA MMZ1005Y102C-T	T	46.9/45.7
EP102	6910018460	S.BEA MMZ1005Y102C-T	B	88.2/29.4
EP500	6910018460	S.BEA MMZ1005Y102C-T	B	72.4/11.7
EP501	6910018460	S.BEA MMZ1005Y102C-T	B	66.5/15.6
EP502	6910018460	S.BEA MMZ1005Y102C-T	B	45.6/32.6
EP503	6910018460	S.BEA MMZ1005Y102C-T	B	42.8/30.5
EP504	6910018460	S.BEA MMZ1005Y102C-T	B	76.9/43.7
EP505	6910018460	S.BEA MMZ1005Y102C-T	B	77.8/42
EP506	6910018460	S.BEA MMZ1005Y102C-T	B	62.7/42.5
EP507	6910018460	S.BEA MMZ1005Y102C-T	B	50.3/49.8
EP508	6910018460	S.BEA MMZ1005Y102C-T	B	74.1/11.7
EP509	6910018460	S.BEA MMZ1005Y102C-T	T	64.8/30.5
MP500	8510017840	S.PLA OG-321610G	B	68.1/48.7
MP510	8510017840	S.PLA OG-321610G	B	68.1/5.3

[VCO UNIT]

REF NO.	PARTS NO.	DESCRIPTION	M.	H/V LOCATION
Q1	1530003560	S.TRA 2SC5195-T1	T	10.4/16.5
Q2	1590003281	S.TRA UNR9211G0L	T	4.6/15.1
Q51	1530003560	S.TRA 2SC5195-T1	T	14/9.6
Q52	1590003281	S.TRA UNR9211G0L	T	18.1/17.4
Q101	1530003260	S.TRA 2SC5006-T1	T	9/2.5
Q102	1590003281	S.TRA UNR9211G0L	T	19/1.8
Q200	1530003260	S.TRA 2SC5006-T1	T	8.8/10.9
Q201	1530003260	S.TRA 2SC5006-T1	T	3.8/3.5
Q202	1530003260	S.TRA 2SC5006-T1	T	5.6/11.4
D1	1750001270	S.VAR 1SV325(TPH3,F)	T	3.2/18
D2	1790001621	S.DIO 1SV308(TPL3,F)	T	7.1/16.3
D3	1750001270	S.VAR 1SV325(TPH3,F)	T	12.2/15.5
D4	1790001251	S.DIO MA2S1110GL	T	12.8/18.9
D5	1750001270	S.VAR 1SV325(TPH3,F)	T	4.4/17.3
D6	1750001270	S.VAR 1SV325(TPH3,F)	T	12.2/14.3
D51	1750000771	S.VAR HVC376BTRF-E	T	16.5/14.2
D52	1790001261	S.DIO MA2S077G0L	T	14.6/17.7
D53	1790001251	S.DIO MA2S1110GL	T	12.4/7.4
D54	1750001270	S.VAR 1SV325(TPH3,F)	T	15.6/12.4
D55	1720000651	S.VAR 1SV286(TPH3,F)	T	17.4/10.6
D100	1720000651	S.VAR 1SV286(TPH3,F)	T	17.4/1.6
D101	1750000721	S.VAR HVC375BTRF-E	T	12.2/2.2
D102	1790001261	S.DIO MA2S077G0L	T	16.8/5.4
D103	1790001251	S.DIO MA2S1110GL	T	7.4/1.6
D104	1750000721	S.VAR HVC375BTRF-E	T	13.9/3.1
L2	6200011650	S.COI LQW18AN68NG00D	T	6.8/18.3
L3	6200011660	S.COI LQW18ANR15G00D	T	5/19.1
L52	6200010850	S.COI LQW18AN22NG00D (LQW1608A22NG00)	T	14.7/13.9
L53	6200012050	S.COI LQW18AN24NG00D	T	14.7/15.1
L101	6200011031	S.COI ELJRF R10JFB	T	7.6/3.5
L102	6200010120	S.COI LQW18AN5N6C00D	T	12.3/4.7
L103	6200012060	S.COI LQW18AN9N1D00D	T	14.1/5.4
L200	6200010991	S.COI ELJRF 47NJFB	T	2.3/1.5
L202	6200007951	S.COI ELJRF 8N2JFB (8.2)	T	3.6/10.1
L203	6200007931	S.COI ELJRF 12NJFB	T	4.1/1.5
L204	6200007961	S.COI ELJRF 6N8JFB (6.8)	T	6.3/5
R1	7030005240	S.RES ERJ2GEJ 473 X (47K)	T	6.2/15
R2	7030007290	S.RES ERJ2GEJ 222 X (2.2K)	T	8/15
R3	7030004970	S.RES ERJ2GEJ 470 X (47)	T	10.7/18.8
R4	7030005050	S.RES ERJ2GEJ 103 X (10K)	T	10.7/17.9
R5	7030005050	S.RES ERJ2GEJ 103 X (10K)	T	9.1/18.8
R6	7030005710	S.RES ERJ2GEJ 121 X (120)	T	10/13.8
R7	7030005090	S.RES ERJ2GEJ 104 X (100K)	T	11.6/12.4
R8	7030005120	S.RES ERJ2GEJ 102 X (1K)	T	2.8/16.4
R9	7030010040	S.RES ERJ2GEJ-JPW	T	11.6/13.3
R10	7030007290	S.RES ERJ2GEJ 222 X (2.2K)	T	7.1/15
R50	7030005120	S.RES ERJ2GEJ 102 X (1K)	T	17.5/13.9
R51	7030005240	S.RES ERJ2GEJ 473 X (47K)	T	16.5/17.2
R52	7030007290	S.RES ERJ2GEJ 222 X (2.2K)	T	15.6/16.4
R53	7030004970	S.RES ERJ2GEJ 470 X (47)	T	12.8/8.4
R54	7030005210	S.RES ERJ2GEJ 822 X (8.2K)	T	15.5/9.5
R55	7030005050	S.RES ERJ2GEJ 103 X (10K)	T	16.4/9.5
R56	7030007270	S.RES ERJ2GEJ 151 X (150)	T	12.3/10.2
R58	7030005600	S.RES ERJ2GEJ 273 X (27K)	T	18.9/11.8
R59	7030005600	S.RES ERJ2GEJ 273 X (27K)	T	19.8/10.2
R60	7030007290	S.RES ERJ2GEJ 222 X (2.2K)	T	13.8/16.4
R61	7030007320	S.RES ERJ2GEJ 225 X (2.2M)	T	19.8/13.4
R62	7030005090	S.RES ERJ2GEJ 104 X (100K)	T	17.7/12.7
R101	7030005240	S.RES ERJ2GEJ 473 X (47K)	T	17.9/6.5
R102	7030007290	S.RES ERJ2GEJ 222 X (2.2K)	T	15.6/6.5
R104	7030007300	S.RES ERJ2GEJ 332 X (3.3K)	T	9.2/1
R105	7030005050	S.RES ERJ2GEJ 103 X (10K)	T	9/4.7
R106	7030004990	S.RES ERJ2GEJ 221 X (220)	T	10.2/5.6
R107	7030005090	S.RES ERJ2GEJ 104 X (100K)	T	18.2/7.4
R108	7030007320	S.RES ERJ2GEJ 225 X (2.2M)	T	16.6/7.4
R109	7030008410	S.RES ERJ2GEJ 392 X (3.9K)	T	16.6/8.3
R110	7030007340	S.RES ERJ2GEJ 153 X (15K)	T	18.9/10.2
R111	7030005120	S.RES ERJ2GEJ 102 X (1K)	T	15.2/3.3
R112	7030007290	S.RES ERJ2GEJ 222 X (2.2K)	T	16.6/4.1
R113	7030005040	S.RES ERJ2GEJ 472 X (4.7K)	T	20.2/16.2
R114	7030010040	S.RES ERJ2GEJ-JPW	T	19.4/3.4
R115	7030010040	S.RES ERJ2GEJ-JPW	T	17.8/3.4
R116	7030004980	S.RES ERJ2GEJ 101 X (100)	T	10/8.2
R200	7030009160	S.RES ERJ2GEJ 181 X (180)	T	7.5/13.2
R201	7030005070	S.RES ERJ2GEJ 683 X (68K)	T	9.5/9.4
R202	7030005300	S.RES ERJ2GEJ 150 X (15)	T	8.9/7
R203	7030004970	S.RES ERJ2GEJ 470 X (47)	T	7.7/8.2
R204	7030005570	S.RES ERJ2GEJ 820 X (82)	T	7.3/7
R205	7030004970	S.RES ERJ2GEJ 470 X (47)	T	2.1/2.7
R206	7030005060	S.RES ERJ2GEJ 333 X (33K)	T	5.3/3.9
R207	7030004970	S.RES ERJ2GEJ 470 X (47)	T	5.9/8.1
R208	7030005070	S.RES ERJ2GEJ 683 X (68K)	T	5.9/9
C1	4030017460	S.CER ECJ0EB1E102K	T	3.1/13.6
C3	4030017690	S.CER ECJ0EC1H121J	T	9.1/17.9
C4	4030016790	S.CER ECJ0EB1C103K	T	7.9/17.6
C5	4030016790	S.CER ECJ0EB1C103K	T	5.5/17
C6	4030017460	S.CER ECJ0EB1E102K	T	3.1/15.2
C7	4030017460	S.CER ECJ0EB1E102K	T	12.8/17.5
C8	4030016790	S.CER ECJ0EB1C103K	T	11.9/17.5
C9	4030017680	S.CER ECJ0EC1H820J	T	8.8/16.6
C10	4030017460	S.CER ECJ0EB1E102K	T	10/14.7
C11	4030017530	S.CER ECJ0EC1H0R5B	T	10.3/11.9
C51	4030017460	S.CER ECJ0EB1E102K	T	18.9/13.8
C53	4030018070	S.CER ECJ0EC1H300J	T	15.5/11.1
C54	4030017460	S.CER ECJ0EB1E102K	T	14.7/16.4
C55	4030017460	S.CER ECJ0EB1E102K	T	17.5/15.7

M.=Mounted side (T: Mounted on the Top side, B: Mounted on the Bottom side)
S.=Surface mount

[VCO UNIT]

REF NO.	PARTS NO.	DESCRIPTION	M.	H/V LOCATION
C56	4030017460	S.CER ECJ0EB1E102K	T	19.6/17.7
C57	4030017460	S.CER ECJ0EB1E102K	T	12.3/9.3
C58	4030017460	S.CER ECJ0EB1E102K	T	14.9/8
C59	4030017650	S.CER ECJ0EC1H270J	T	13.9/11.1
C60	4030017420	S.CER ECJ0EC1H470J	T	13.4/12.3
C61	4030017540	S.CER ECJ0EC1HR75B	T	12.3/11.1
C62	4030016930	S.CER ECJ0EB1A104K	T	19.8/11.8
C63	4030017530	S.CER ECJ0EC1H0R5B	T	16.4/11.1
C101	4030017460	S.CER ECJ0EB1E102K	T	15.9/1.5
C102	4030017500	S.CER ECJ0EC1H560J	T	15.9/2.4
C103	4030017620	S.CER ECJ0EC1H100C	T	10.8/1.1
C104	4030017460	S.CER ECJ0EB1E102K	T	14/6.5
C105	4030017460	S.CER ECJ0EB1E102K	T	17.8/4.4
C106	4030017460	S.CER ECJ0EB1E102K	T	19.8/4.5
C107	4030017460	S.CER ECJ0EB1E102K	T	7.2/4.7
C108	4030017460	S.CER ECJ0EB1E102K	T	8.1/4.7
C109	4030017390	S.CER ECJ0EC1H180J	T	10.5/2.5
C110	4030017380	S.CER ECJ0EC1H050B	T	10.2/4.7
C111	4030017550	S.CER ECJ0EC1H1R5B [EUR]	T	10.7/6.8
	4030017550	S.CER ECJ0EC1H1R5B [UK]		
	4030017550	S.CER ECJ0EC1H1R5B [ITR]		
	4030017350	S.CER ECJ0EC1H020B [USA]		
	4030017550	S.CER ECJ0EC1H1R5B [FRA]		
	4030017350	S.CER ECJ0EC1H020B [SEA]		
	4030017350	S.CER ECJ0EC1H020B [CHN]		
	4030017350	S.CER ECJ0EC1H020B [KOR]		
	4030017350	S.CER ECJ0EC1H020B [AUS]		
	4030017350	S.CER ECJ0EC1H020B [EXP]		
C112	4030017530	S.CER ECJ0EC1H0R5B	T	12.5/1.1
C114	4030017460	S.CER ECJ0EB1E102K	T	18/8.6
C115	4030016930	S.CER ECJ0EB1A104K	T	18.9/8.6
C116	4030017460	S.CER ECJ0EB1E102K	T	19.8/7.7
C117	4030018860	S.CER ECJ0EB0J105K	T	19.8/15
C118	4030017640	S.CER ECJ0EC1H150J	T	10.2/3.8
C200	4030017460	S.CER ECJ0EB1E102K	T	8.4/12.9
C201	4030017460	S.CER ECJ0EB1E102K	T	9.1/8.2
C202	4030017460	S.CER ECJ0EB1E102K	T	2.4/5.6
C203	4030017460	S.CER ECJ0EB1E102K	T	2.3/4.4
C204	4030017460	S.CER ECJ0EB1E102K	T	5.3/5.5
C205	4030017460	S.CER ECJ0EB1E102K	T	3.2/1.5
C206	4030017460	S.CER ECJ0EB1E102K	T	5.6/12.9
C207	4030017460	S.CER ECJ0EB1E102K	T	7.2/10.5
C208	4030017460	S.CER ECJ0EB1E102K	T	3.1/11.9
C209	4030017380	S.CER ECJ0EC1H050B	T	3.3/8.3
C210	4030017380	S.CER ECJ0EC1H050B	T	2.4/8.3
C211	4030017360	S.CER ECJ0EC1H030B	T	2.7/10.1
C213	4030017590	S.CER ECJ0EC1H070C	T	5.5/2.7
J1	6510025380	S.CON AXK716147G	B	4.8/10

M.=Mounted side (T: Mounted on the Top side, B: Mounted on the Bottom side)
S.=Surface mount

BOARD LAYOUTS

The combination of top side and bottom side of this page shows the actual configuration of P.C. board.

• LOGIC UNIT (TOP VIEW)

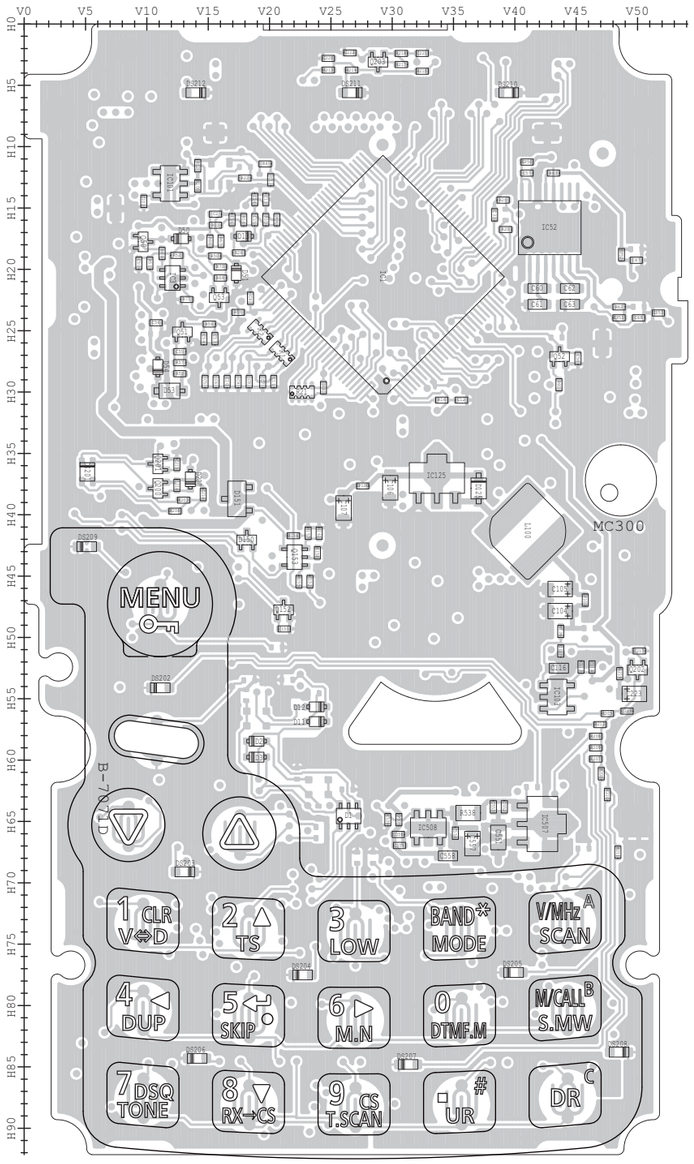

• MAIN UNIT (TOP VIEW)

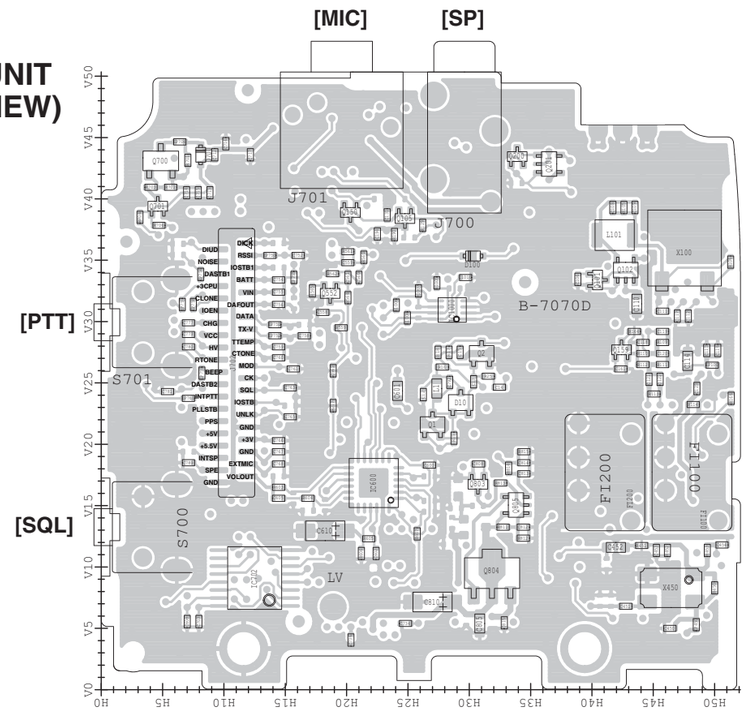

• RF UNIT (TOP VIEW)

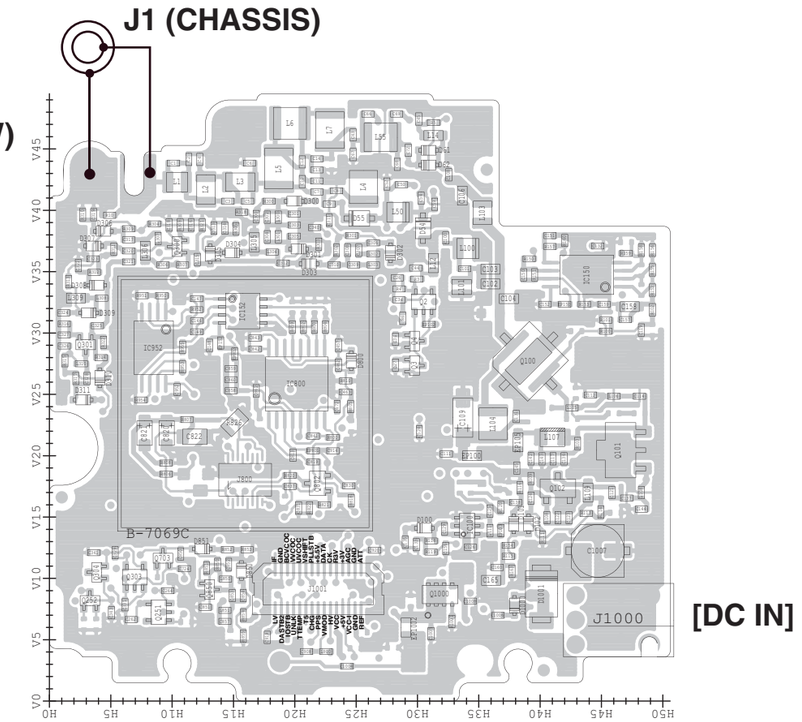

• VCO UNIT (TOP VIEW)

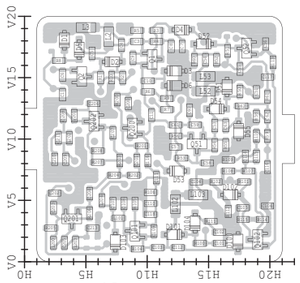

• MAIN UNIT (BOTTOM VIEW)

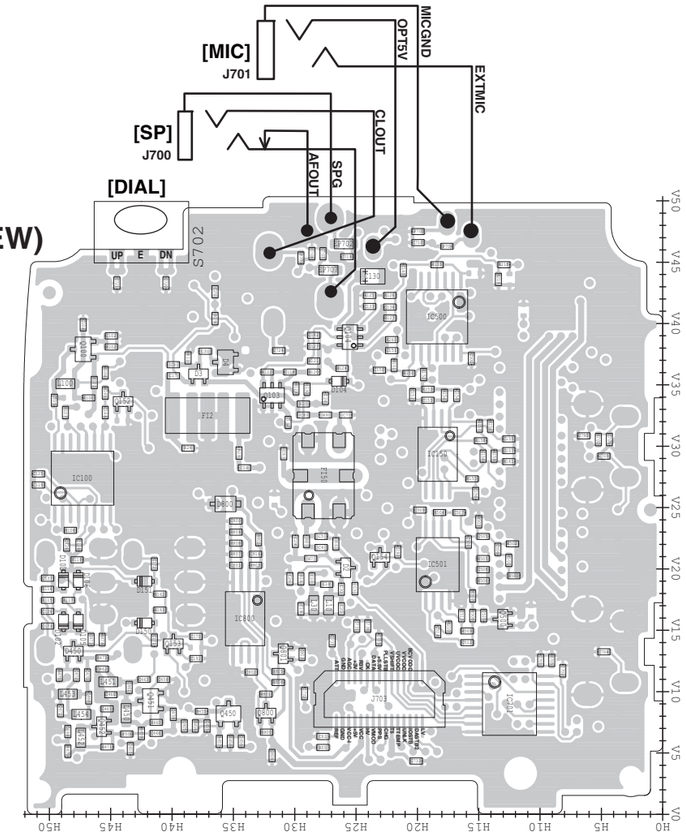

• RF UNIT (BOTTOM VIEW)

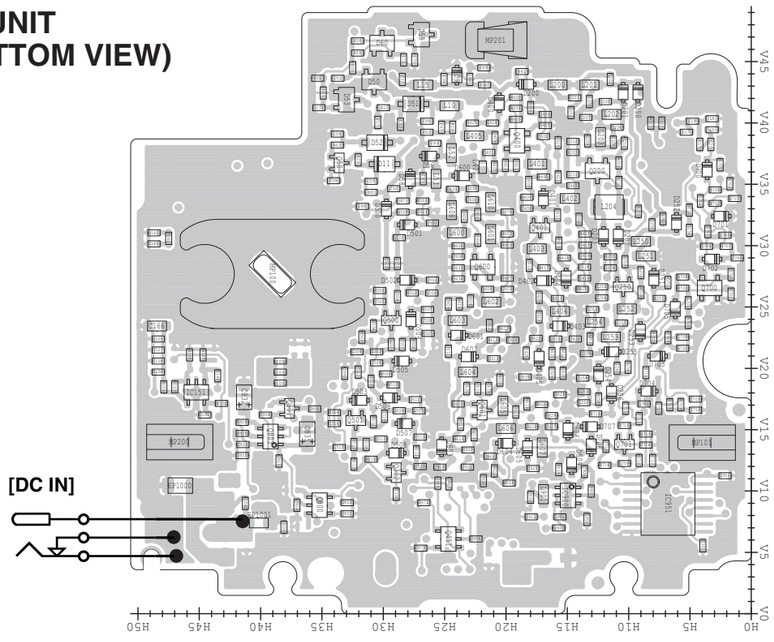

The combination of top side and bottom side of this page shows the actual configuration of P.C. board.

• LOGIC UNIT (BOTTOM VIEW)

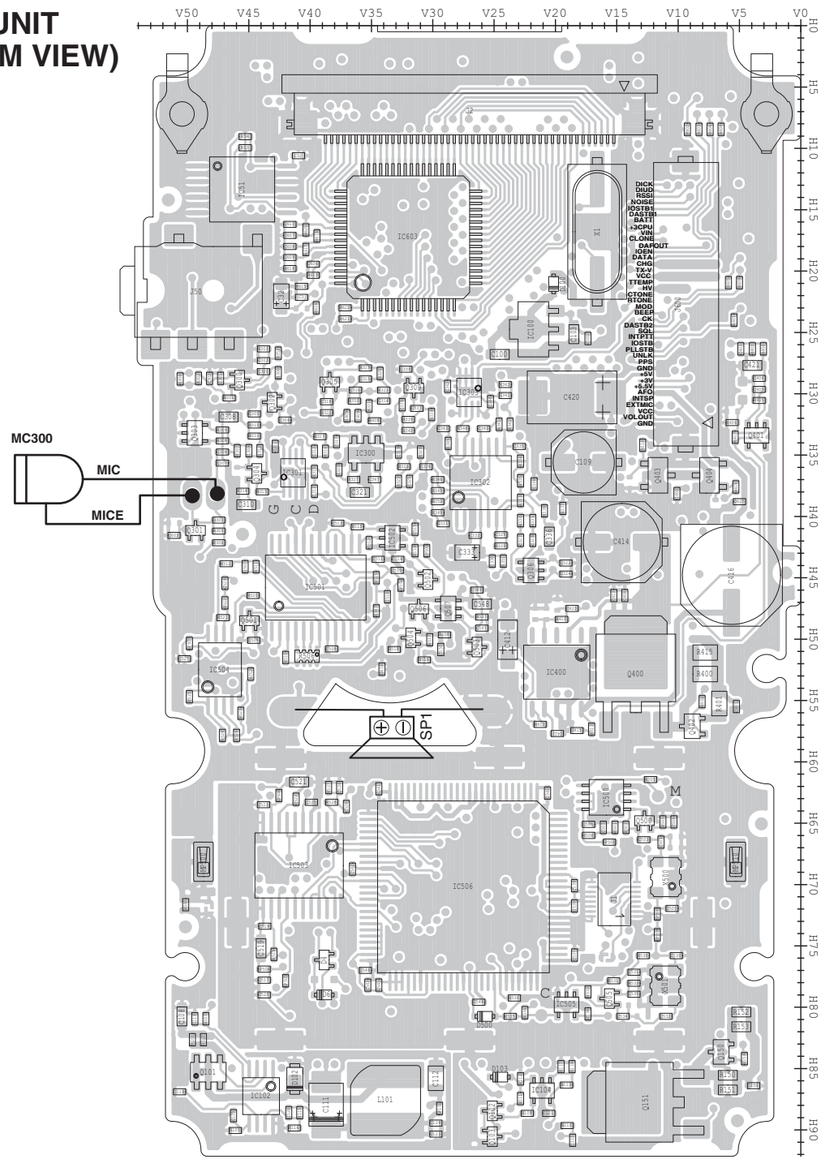

• VCO UNIT (BOTTOM VIEW)

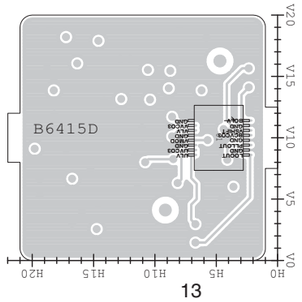

VOLTAGE DIAGRAM

LOGIC UNIT (1/2)

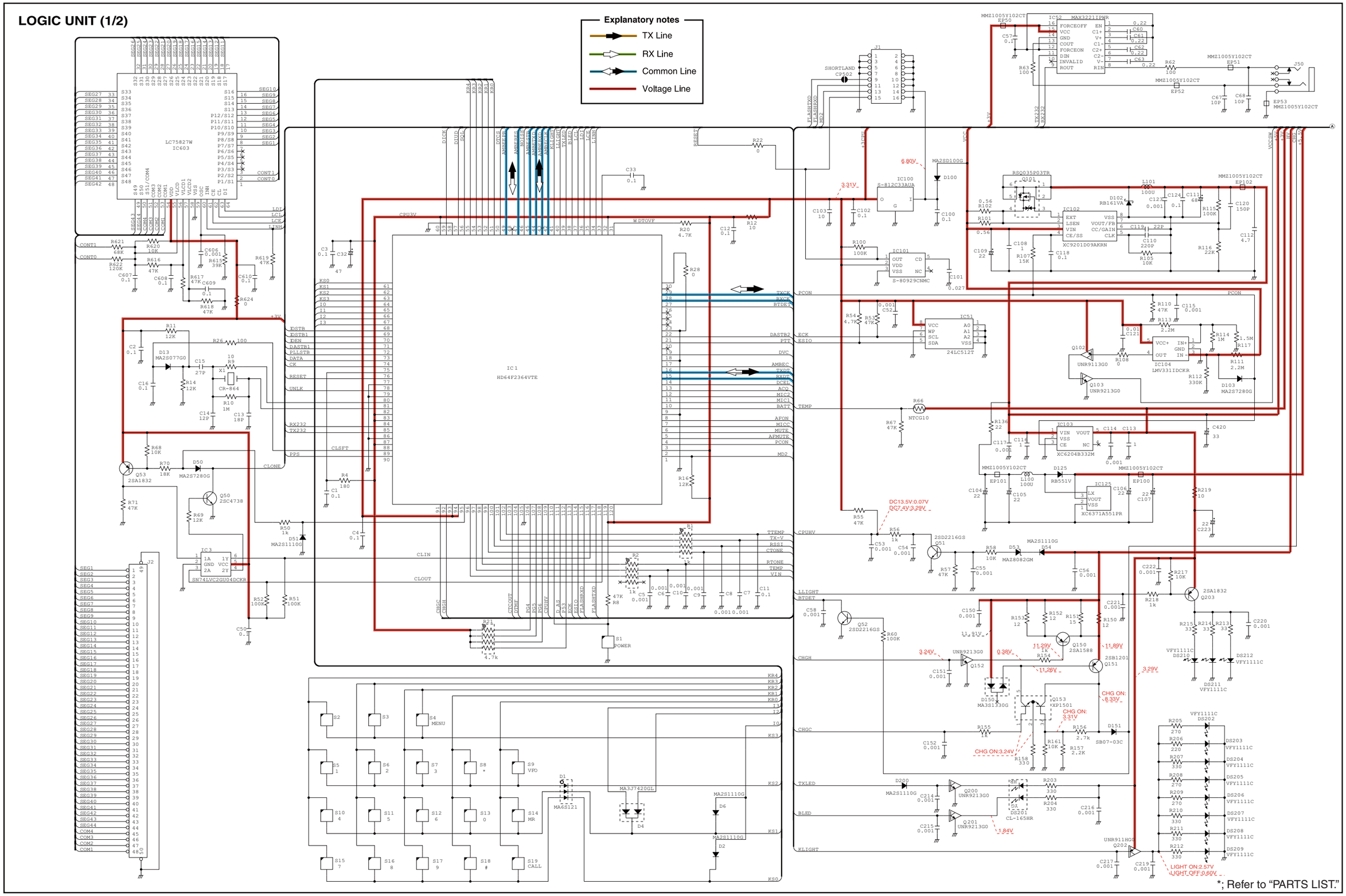

LOGIC UNIT (2/2)

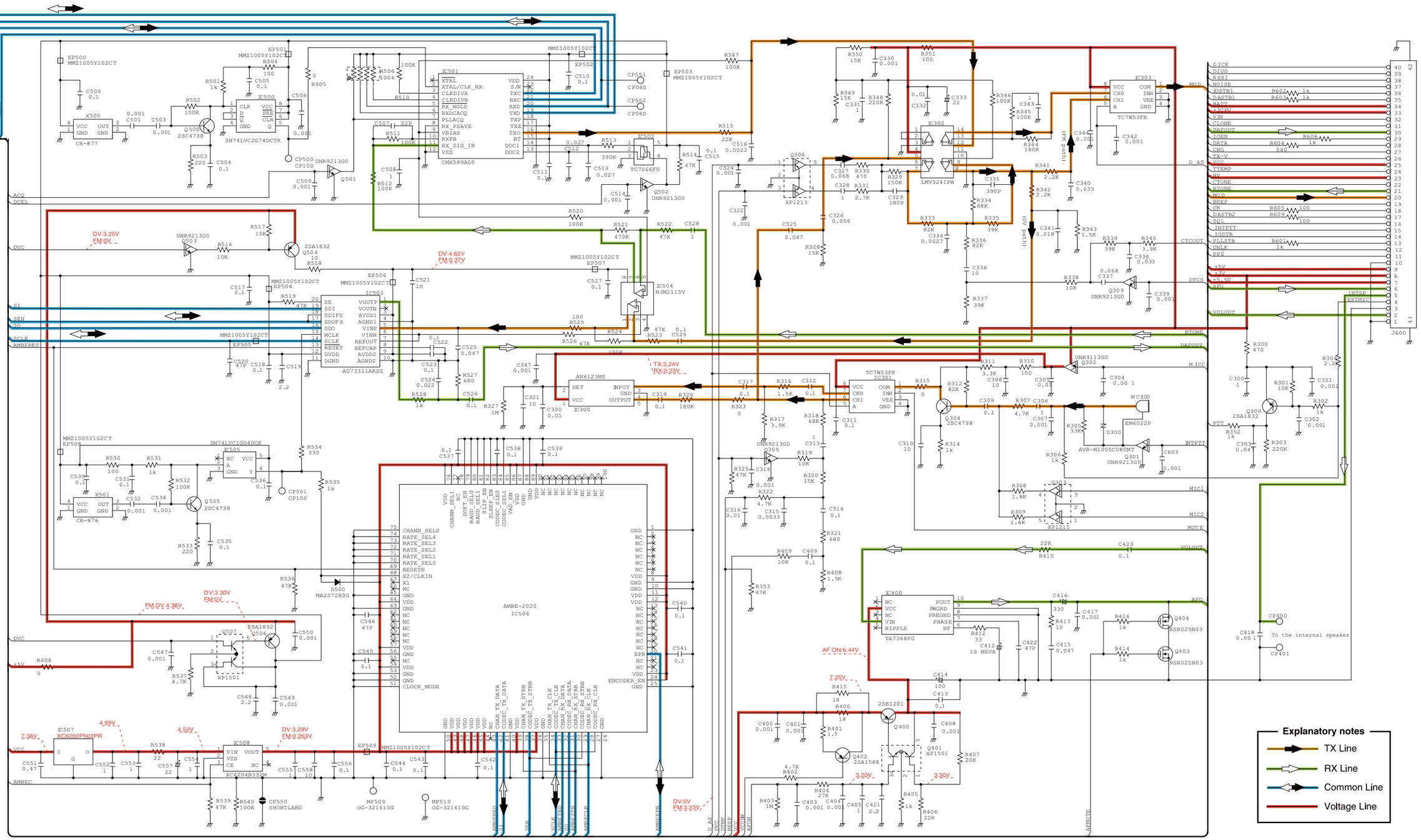

*; Refer to "PARTS LIST."

MAIN UNIT (1/2)

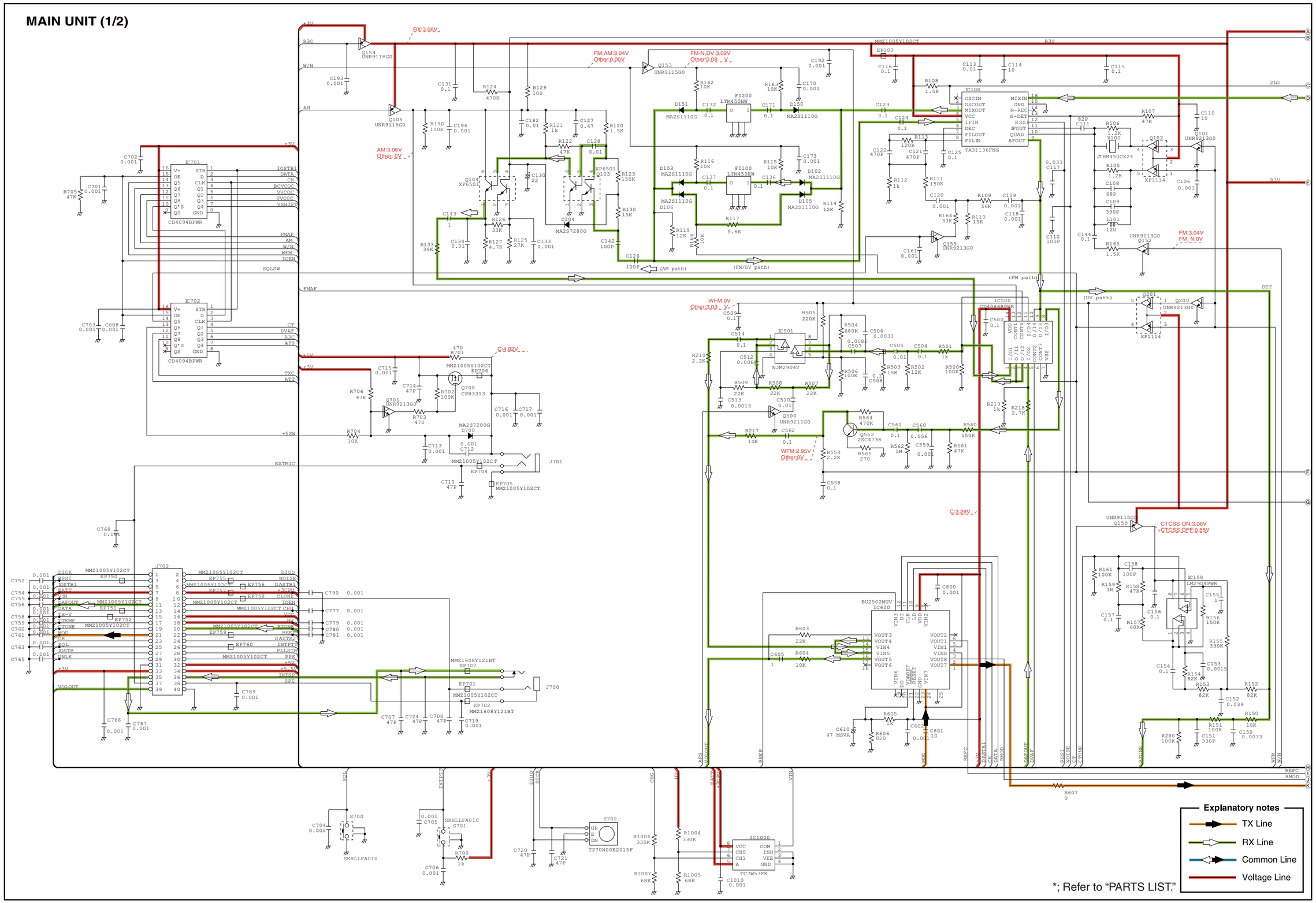
Explanatory notes
TX Line
RX Line
Common Line
Voltage Line
*; Refer to "PARTS LIST."

MAIN UNIT (2/2)

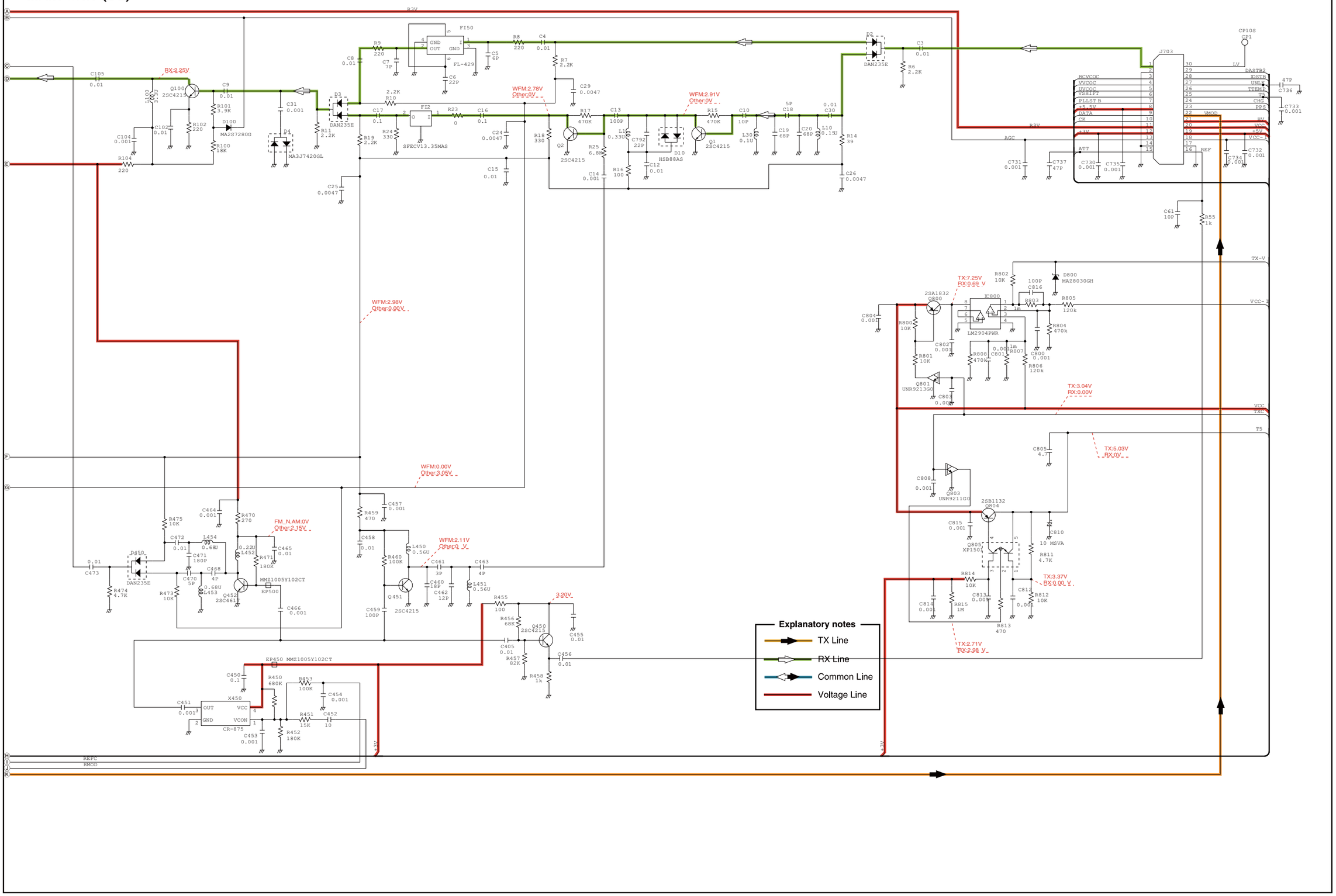

*; Refer to “PARTS LIST.”

RF UNIT (1/2)

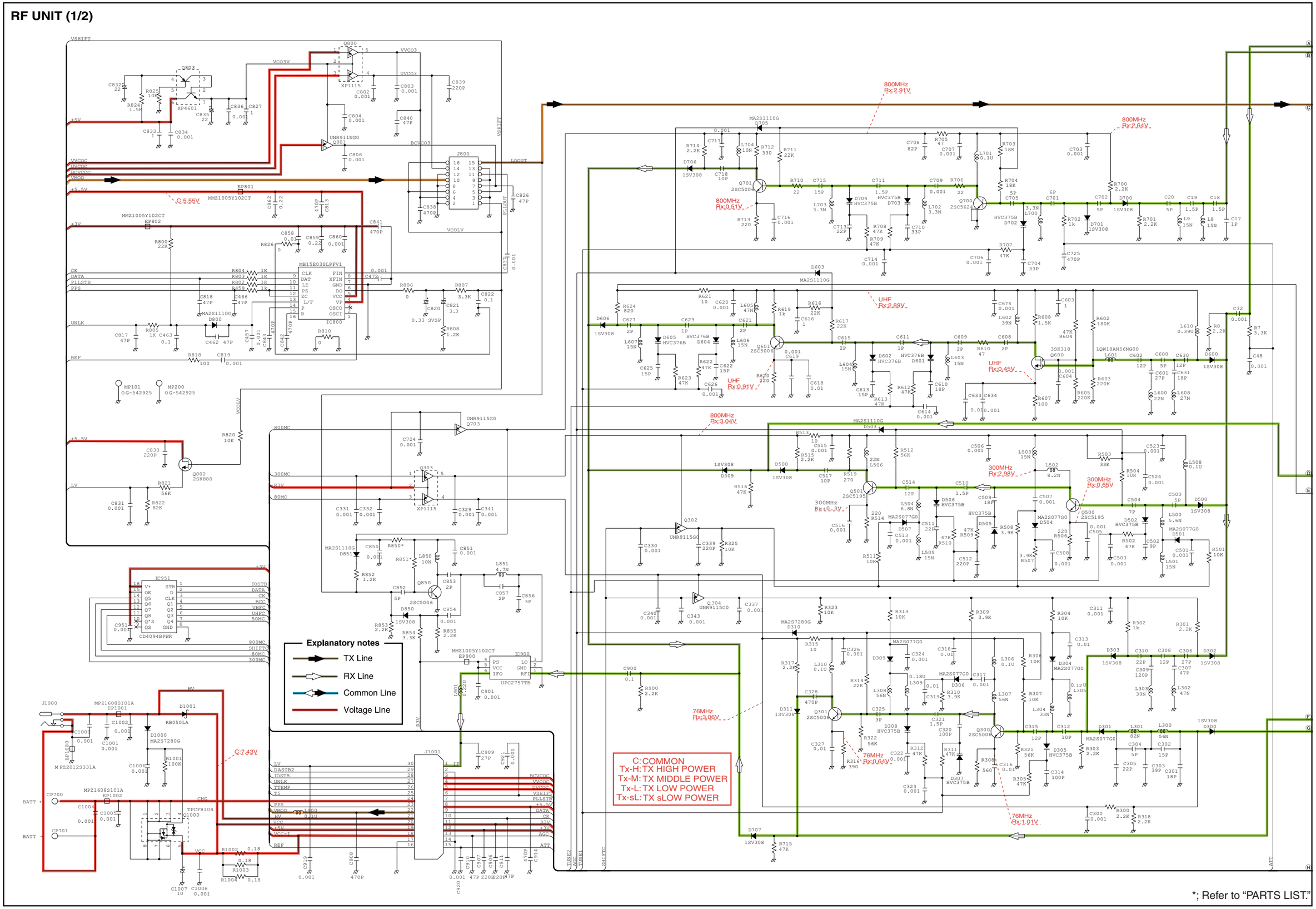
Explanatory notes
TX Line
RX Line
Common Line
Voltage Line
C:COMMON
Tx-H:TX HIGH POWER
Tx-M:TX MIDDLE POWER
Tx-L:TX LOW POWER
Tx-sL:TX sLOW POWER
800MHz Rx:2.91V
800MHz Rx:2.64V
800MHz Rx:0.51V
UHF Rx:2.89V
UHF Rx:0.45V
UHF Rx:0.91V
800MHz Rx:3.04V
300MHz Rx:2.98V
300MHz Rx:0.65V
300MHz Rx:0.3V
76MHz Rx:3.06V
76MHz Rx:0.64V
76MHz Rx:1.01V
C:5.55V
C:7.43V
*; Refer to "PARTS LIST."

RF UNIT (2/2)

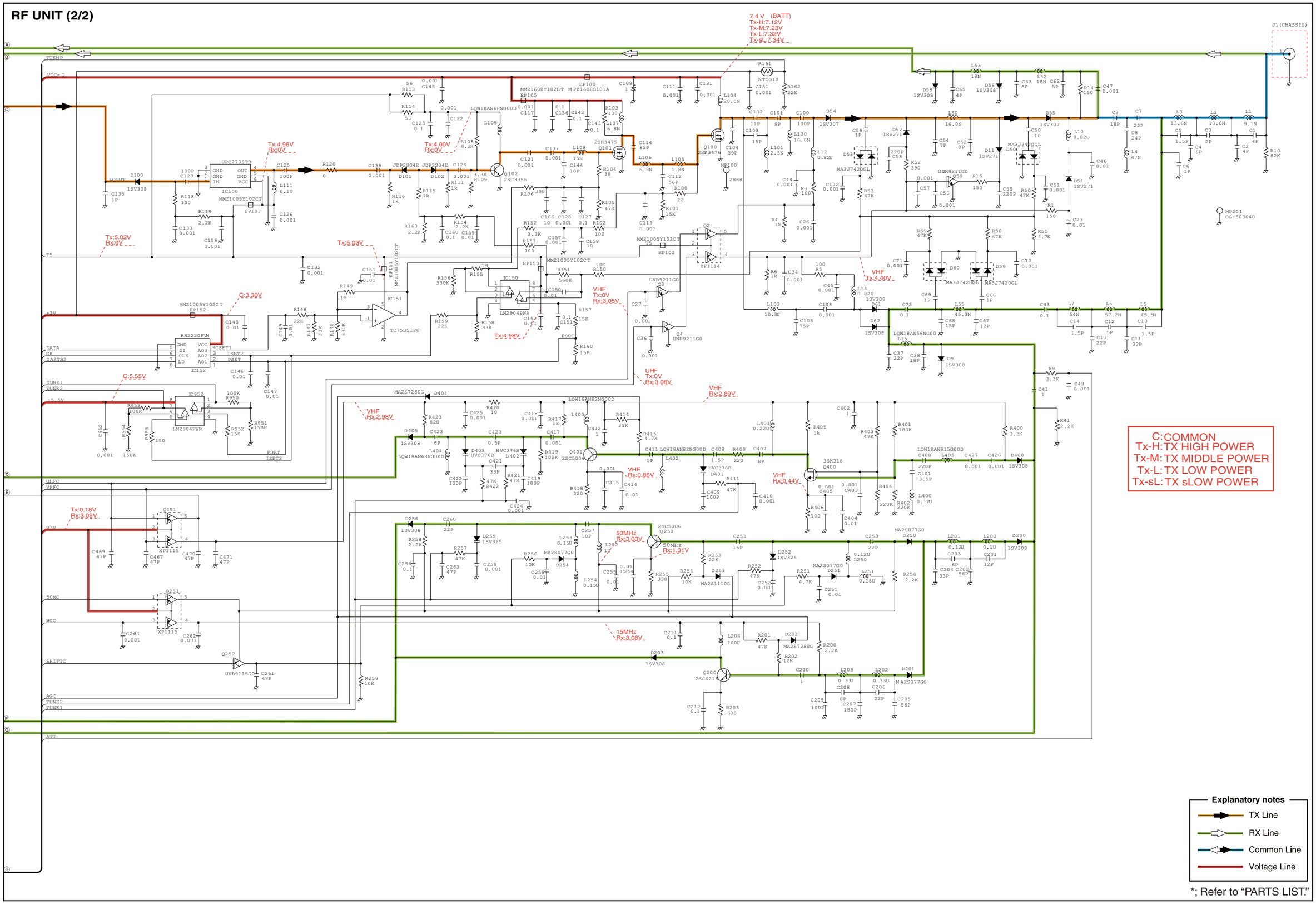
7.4 V (BATT)
Tx-H:7.12V
Tx-M:7.23V
Tx-L:7.32V
Tx-sL:7.34V
J1 (CHASSIS)
Tx:4.96V
Rx:0V
Tx:4.00V
Rx:0V
Tx:5.02V
Rx:0V
Tx:5.03V
C:3.30V
C:5.55V
VHF
Tx:4.40V
VHF
Tx:0V
Rx:3.05V
Tx:4.98V
UHF
Tx:0V
Rx:3.06V
VHF
Rx:2.89V
VHF
Rx:2.98V
VHF
Rx:0.86V
VHF
Rx:0.44V
Tx:0.18V
Rx:3.09V
50MHz
Rx:3.03V
50MHz
Rx:1.31V
15MHz
Rx:3.06V
MP201
OG-503040
C: COMMON
Tx-H: TX HIGH POWER
Tx-M: TX MIDDLE POWER
Tx-L: TX LOW POWER
Tx-sL: TX sLOW POWER
Explanatory notes
TX Line
RX Line
Common Line
Voltage Line
*; Refer to "PARTS LIST."

VCO UNIT

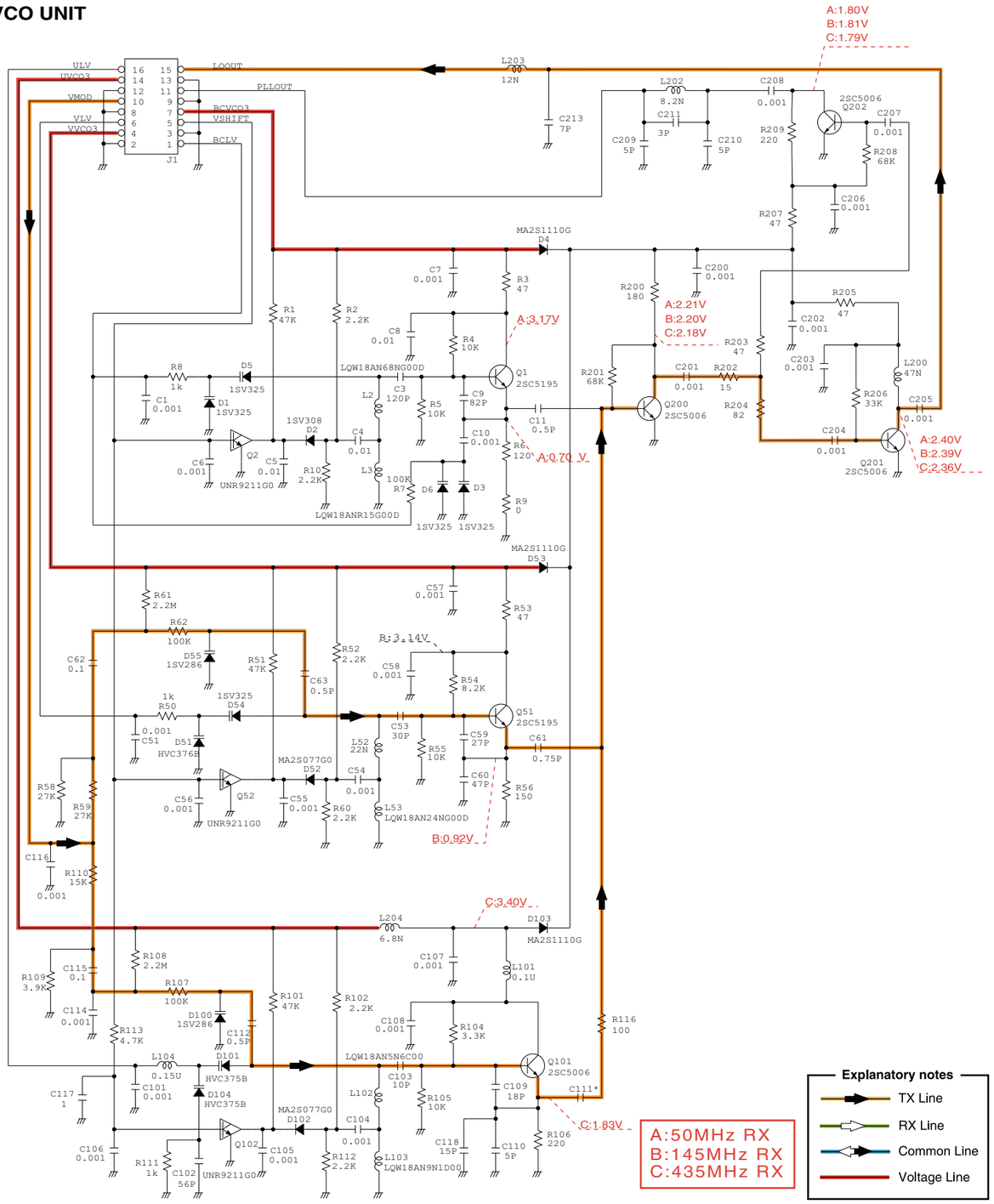
A:1.80V
B:1.81V
C:1.79V
A:2.21V
B:2.20V
C:2.18V
A:3.17V
A:0.70 V
A:2.40V
B:2.39V
C:2.36V
B:3.14V
B:0.92V
C:3.40V
C:1.83V
A:50MHz RX
B:145MHz RX
C:435MHz RX
Explanatory notes
TX Line
RX Line
Common Line
Voltage Line
*; Refer to "PARTS LIST."

ICOM

SERVICE MANUAL

VHF/UHF DIGITAL TRANSCEIVER

IC-80AD
IC-E80D

S-14528XZ-C1
Apr. 2009

Icom Inc.

INTRODUCTION

This service manual describes the latest technical information for the **IC-80AD** and **IC-E80D** VHF/UHF DIGITAL TRANSCEIVER at the time of publication.

MODEL	VERSION	TYPE OF EMISSION	Max. TX POWER (VHF/UHF)
IC-80AD	[USA]	F2D, F3E, F7W	5 W/5 W
	[SEA]		
	[CHN]		
	[KOR]		
	[AUS]		
	[EXP]		
IC-E80D	[EUR]		
	[UK]		
	[ITR]		
	[FRA]		

To upgrade quality, any electrical or mechanical parts and internal circuits are subject to change without notice or obligation.

UNIT ABBREVIATIONS:
F=FRONT UNIT
L=LOGIC UNIT
M=MAIN UNIT
V=VCO UNIT
R=RF UNIT

(IC-80AD)

CAUTION

NEVER connect the transceiver to an AC outlet or to a DC power supply that uses more than specified. This will ruin the transceiver.

DO NOT expose the transceiver to rain, snow or any liquids.

DO NOT reverse the polarities of the power supply when connecting the transceiver.

DO NOT apply an RF signal of more than 20 dBm (100 mW) to the antenna connector. This could damage the transceiver's front-end.

ORDERING PARTS

Be sure to include the following four points when ordering replacement parts:

1. 10-digit Icom parts numbers
2. Component name
3. Equipment model name and unit name
4. Quantity required

<ORDER EXAMPLE>

1110003491	S.IC	TA31136FNG	IC-E80D/80AD	MAIN UNIT	5 pieces
8820001210	Screw	2438 screw	IC-E80D/80AD	Top cover	10 pieces

Addresses are provided on the inside back cover for your convenience.

REPAIR NOTES

1. Make sure that the problem is internal before disassembling the transceiver.
2. **DO NOT** open the transceiver until the transceiver is disconnected from its power source.
3. **DO NOT** force any of the variable components. Turn them slowly and smoothly.
4. **DO NOT** short any circuits or electronic parts. An insulated tuning tool **MUST** be used for all adjustments.
5. **DO NOT** keep power ON for a long time when the transceiver is defective.
6. **DO NOT** transmit power into a Standard Signal Generator or a Sweep Generator.
7. **ALWAYS** connect a 50 dB to 60 dB attenuator between the transceiver and a Deviation Meter or Spectrum Analyzer when using such test equipment.
8. **READ** the instructions of test equipment throughly before connecting a test equipment to the transceiver.

Icom, Icom Inc. and ICOM logo are registered trademarks of Icom Incorporated (Japan) in the United States, the United Kingdom, Germany, France, Spain, Russia and/or other countries.

TABLE OF CONTENTS

SECTION 1 SPECIFICATIONS

SECTION 2 INSIDE VIEWS

SECTION 3 DISASSEMBLY INSTRUCTION

SECTION 4 CIRCUIT DESCRIPITON

4-1 RECEIVER CIRCUITS 4-1
4-2 TRANSMITTER CIRCUITS 4-4
4-3 FREQUENCY SYNTHESIZER CIRCUITS 4-5
4-4 CPU (LOGIC UNIT: IC1) PORT ALLOCATION 4-6
4-5 VOLTAGE BLOCK DIAGRAM 4-7

SECTION 5 ADJUSTMENT PROCEDURE

5-1 PREPARATION 5-1
5-2 FREQUENCY ADJUSTMENT 5-3
5-3 IDLING CURRENT ADJUSTMENT (at 5.0 V) 5-3
5-4 IDLING CURRENT ADJUSTMENT (at 7.4 V) 5-4
5-5 IDLING CURRENT ADJUSTMENT (at 13.5 V) 5-5
5-6 TRANSMIT POWER ADJUSTMENT (at 5.0 V) 5-6
5-7 TRANSMIT POWER ADJUSTMENT (at 7.4 V) 5-6
5-8 TRANSMIT POWER ADJUSTMENT (at 13.5 V) 5-7
5-9 DEVIATION ADJUSTMENTS 5-8
5-10 TONE DEVIATION ADJUSTMENTS 5-9
5-11 RECEIVE SENSITIVITY ADJUSTMENT 5-10
5-12 S-METER ADJUSTMENT 5-12

SECTION 6 PARTS LIST

SECTION 7 MECHANICAL PARTS

SECTION 8 BOARD LAYOUTS

SECTION 9 BLOCK DIAGRAM

SECTION 10 VOLTAGE DIAGRAM

LOGIC UNIT 10-1
MAIN UNIT 10-3
RF UNIT 10-5
VCO UNIT 10-7

SECTION 1 SPECIFICATIONS

◇ General

<For IC-80AD> (unit: MHz)

Version	TX	RX
U.S.A.	144–148, 420–450*1	0.495–823.990, 849–868.990, 894–999.990
S.E.A. CHN EXP	137–174*2, 400–470*2	0.495–999.990
KOR	144–146, 430–440	144–146, 430–440
AUS	144–148, 420–450*2	0.495–999.990

*1Guaranteed 440–450 MHz only, *2Guaranteed 430–440 MHz only

<For IC-E80D> (unit: MHz)

Version	TX	RX
U.S.A.	144–148, 420–450*1	0.495–823.990, 849–868.990, 894–999.990
S.E.A. CHN EXP	137–174*2, 400–470*2	0.495–999.990
KOR	144–146, 430–440	144–146, 430–440
AUS	144–148, 420–450*2	0.495–999.990

*1Guaranteed 440–450 MHz only, *2Guaranteed 430–440 MHz only

- Mode : FM, FN-N, AM (Rx only), WFM (Rx only), DV
- No. of memory channels : 1052 (incl. 50 scan edges and 2 call channels)
- Usable temp. range : –20°C to +60°C; –4°F to +140°F
- Tuning steps : 5‡, 6.25‡, 8.33‡, 9‡, 10, 12.5, 15‡, 20, 25, 30, 50, 100, 125 and 200 kHz
  ‡Selectable depending on the operating frequency band.
- Frequency stability : ±2.5 ppm (–20°C to +60°C; –4°F to +140°F)
- Power supply : 10.0–16.0 V DC for external DC power, or specified Icom's battery pack
- Digital transmission speed : 4.8 kbps
- Voice coding speed : 2.4 kbps
- Current drain (at 7.4 V DC) :

Tx High	144 MHz	1.8 A typical
	430/440 MHz	2.1 A typical
Tx Mid.	144 MHz	1.2 A typical
	430/440 MHz	1.5 A typical
Tx Low	144 MHz	0.6 A typical
	430/440 MHz	0.7 A typical
Tx S-Low	144 MHz	0.4 A typical
Rx	Rated output	170 mA typical (FM)
		215 mA typical (DV)
	Power save	30 mA typical (FM)
	(Duty 1:4)	38 mA typical (DV)
	standby	62 mA typical (FM)
		106 mA typical (DV)

- Antenna connector : SMA (50 Ω)
- Dimensions (projections not included) : 58.4(W)×103(H)×34.2(D) mm; 2 5/16(W)×4 1/16(H)×1 11/32(D) in
- Weight (approx.) : 290 g; 10.3 oz (with antenna and BP-217)

◇ Transmitter

- Modulation system :
  - FM — Variable reactance freq. modulation
  - DV (Digital) — GMSK reactance freq. modulation
- Output power (at 7.4 V DC) (Typical) : High 5.0 W, Mid. 2.5 W, Low 0.5 W, S-Low 0.1 W
- Max. frequency deviation : ±5.0 kHz (FM wide: approx.) ±2.5 kHz (FM narrow: approx.)
- Spurious emissions : Less than –60 dBc at High/Mid. Less than –13 dBm at Low/Slow
- Ext. mic. impedance : 2 kΩ

◇ Receiver

- Receive system :
  - Except WFM — Double-conversion superheterodyne
  - WFM — Triple-conversion superheterodyne
- Intermediate frequencies :
  - 1st — 61.65 MHz/59.25 MHz (WFM only)
  - 2nd — 450 kHz/13.35 MHz (WFM only)
  - 3rd — 1.95 MHz (WFM only)
- Sensitivity (except spurious points):

FM (1 kHz/3.5 kHz Dev.; 12 dB SINAD)	
1.625–29.995 MHz	0.4 µV typ.
30.000–75.995 MHz	0.25 µV typ.
76.000–117.995 MHz	0.25 µV typ.
118.000–173.995 MHz	0.14 µV typ.
174.000–259.995 MHz	0.32 µV typ.
260.000–349.995 MHz	0.32 µV typ.
350.000–469.995 MHz	0.16 µV typ.
470.000–599.995 MHz	0.32 µV typ.
600.000–999.990 MHz	0.56 µV typ.
WFM (1 kHz/52.5 kHz Dev.; 12 dB SINAD)	
76.000–108.000 MHz	1 µV typ.
175.000–221.995 MHz	1.8 µV typ.
470.000–770.000 MHz	2.5 µV typ.
AM (1 kHz/30% Mod.; 10 dB S/N)	
0.495–4.995 MHz	1.3 µV typ.
5.000–29.995 MHz	0.56 µV typ.
118.000–137.000 MHz	0.5 µV typ.
222.000–246.995 MHz	0.79 µV typ.
247.000–329.995 MHz	1 µV typ.
DV (PN9/GMSK 4.8ksps; BER 1%)	
VHF (Amateur band only)	0.22 µV typ.
UHF (Amateur band only)	0.22 µV typ.

- Audio output power (at 7.4 V DC) : More than 300 mW at 10% distortion with an 8 Ω load
- Selectivity :
  - FM (Wide), AM — More than 50 dB
  - FM (Narrow), DV — More than 45 dB
  - WFM — More than 300 kHz/–3 dB; Less than 700 kHz/–20 dB
- Ext. speaker connector : 3-conductor 3.5(d) mm; (1/8″)/8 Ω
- Spurious and image rejection ratio :
  - VHF More than 60 dB
  - UHF More than 50 dB
  - (Intermediate freq.; More than 60 dB)
- Squelch Sensitivity (except spurious points):

FM (1 kHz/3.5 kHz Dev.)	
1.625–29.995 MHz	0.4 µV typ.
30.000–75.995 MHz	0.25 µV typ.
76.000–117.995 MHz	0.25 µV typ.
118.000–173.995 MHz	0.14 µV typ.
174.000–259.995 MHz	0.32 µV typ.
260.000–349.995 MHz	0.32 µV typ.
350.000–469.995 MHz	0.16 µV typ.
470.000–599.995 MHz	0.32 µV typ.
600.000–999.990 MHz	0.56 µV typ.
WFM (1 kHz/52.5 kHz Dev.)	
76.000–108.000 MHz	1 µV typ.
175.000–221.995 MHz	1.8 µV typ.
470.000–770.000 MHz	2.5 µV typ.
AM (1 kHz/30% Mod.)	
0.495–4.995 MHz	1.3 µV typ.
5.000–29.995 MHz	0.56 µV typ.
118.000–137.000 MHz	0.5 µV typ.
222.000–246.995 MHz	0.79 µV typ.
247.000–329.995 MHz	1 µV typ.

All stated specifications are subject to change without notice or obligation.

• **LOGIC UNIT**

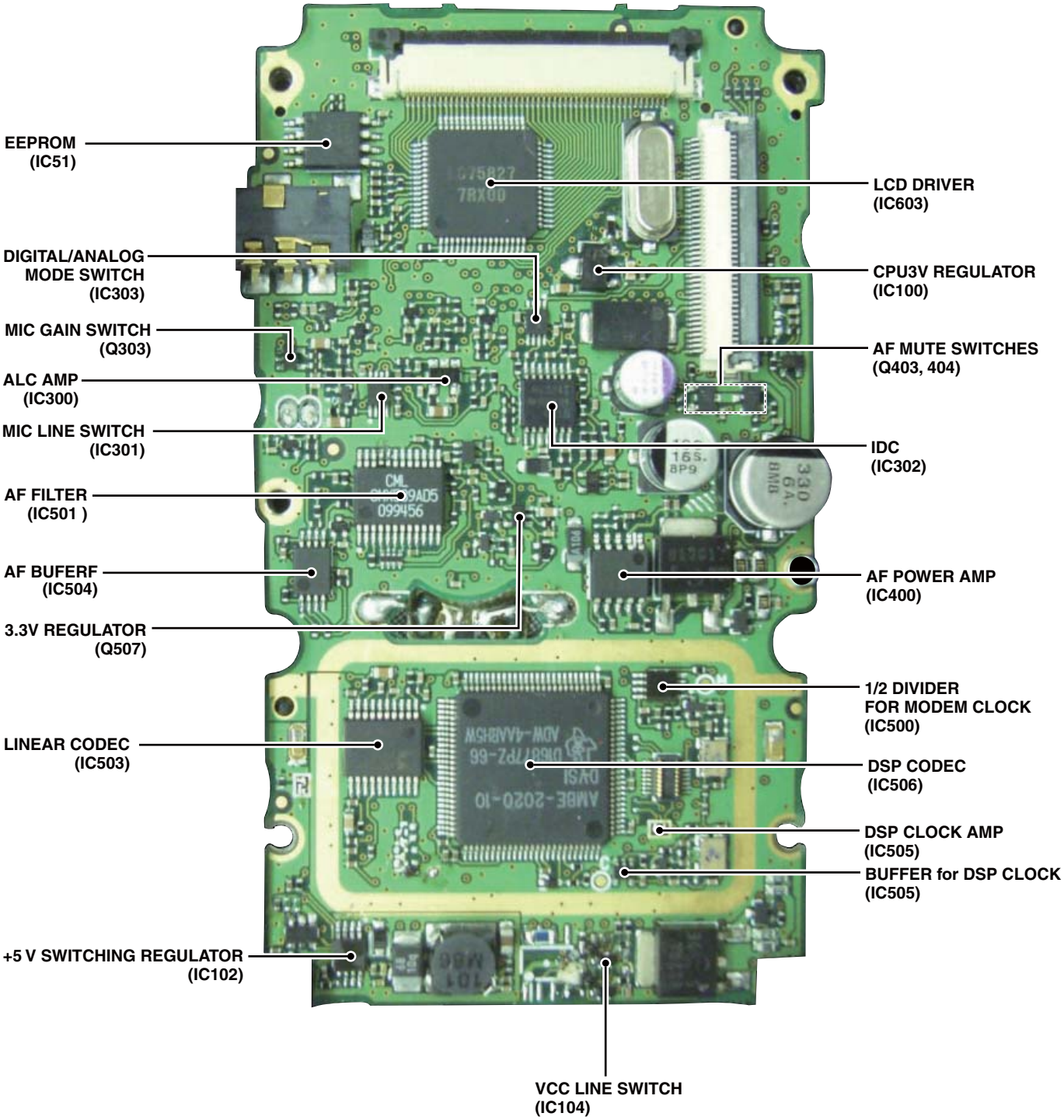
EEPROM (IC51)
DIGITAL/ANALOG MODE SWITCH (IC303)
MIC GAIN SWITCH (Q303)
ALC AMP (IC300)
MIC LINE SWITCH (IC301)
AF FILTER (IC501)
AF BUFERF (IC504)
3.3V REGULATOR (Q507)
LINEAR CODEC (IC503)
+5 V SWITCHING REGULATOR (IC102)
VCC LINE SWITCH (IC104)
LCD DRIVER (IC603)
CPU3V REGULATOR (IC100)
AF MUTE SWITCHES (Q403, 404)
IDC (IC302)
AF POWER AMP (IC400)
1/2 DIVIDER FOR MODEM CLOCK (IC500)
DSP CODEC (IC506)
DSP CLOCK AMP (IC505)
BUFFER for DSP CLOCK (IC505)

• MAIN UNIT
(TOP VIEW)

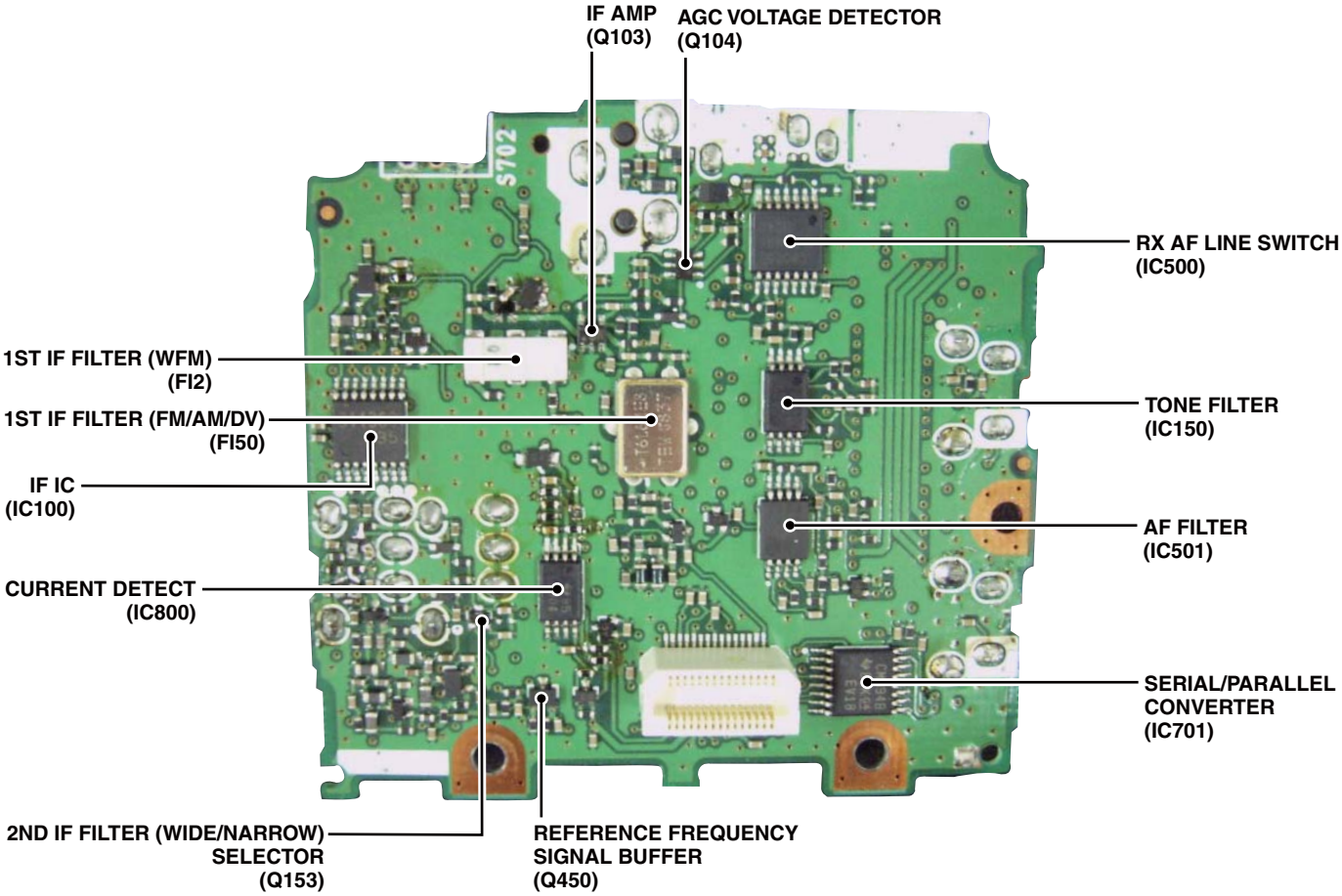

• MAIN UNIT
(BOTTOM VIEW)

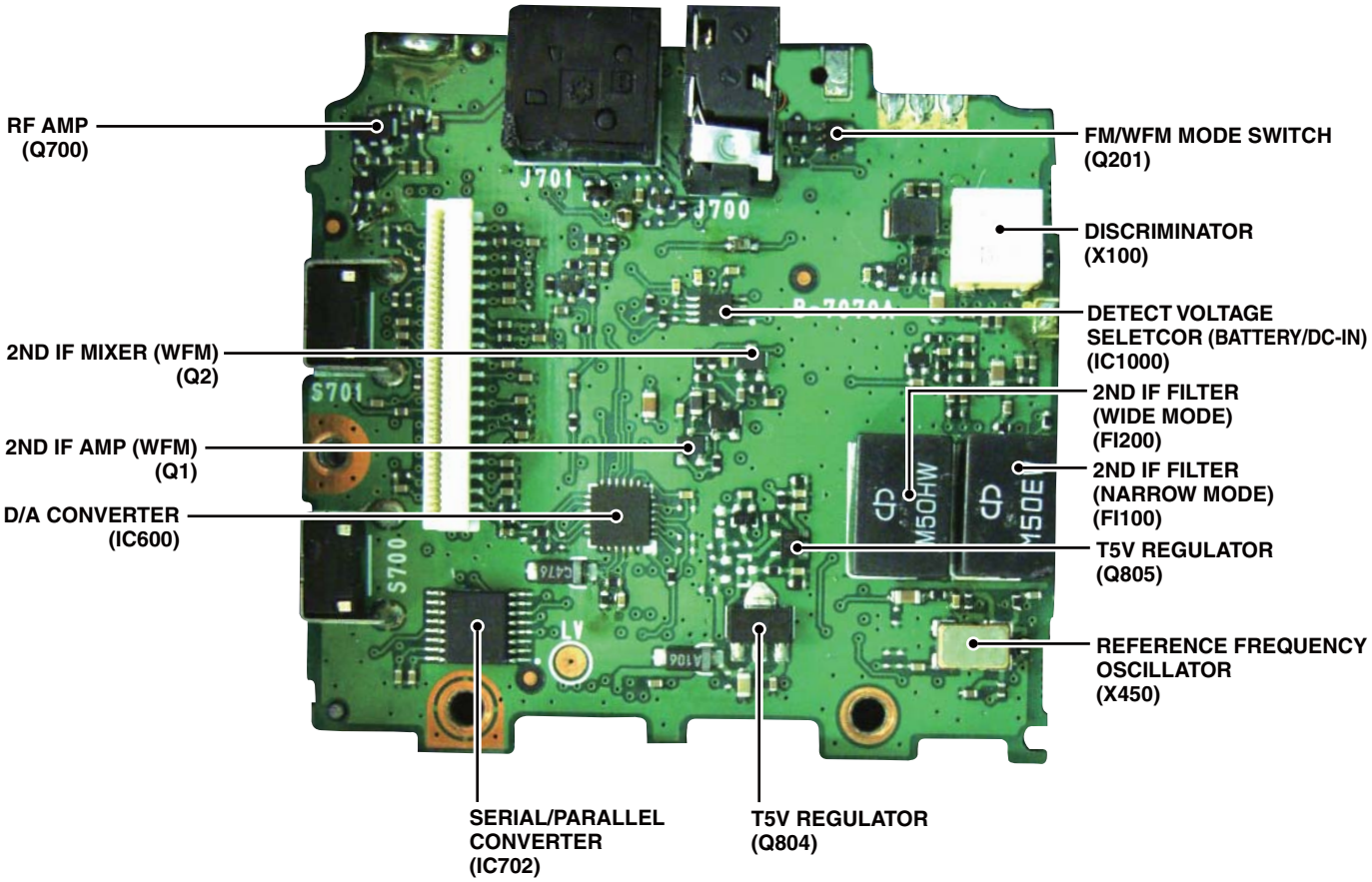

• **RF UNIT**

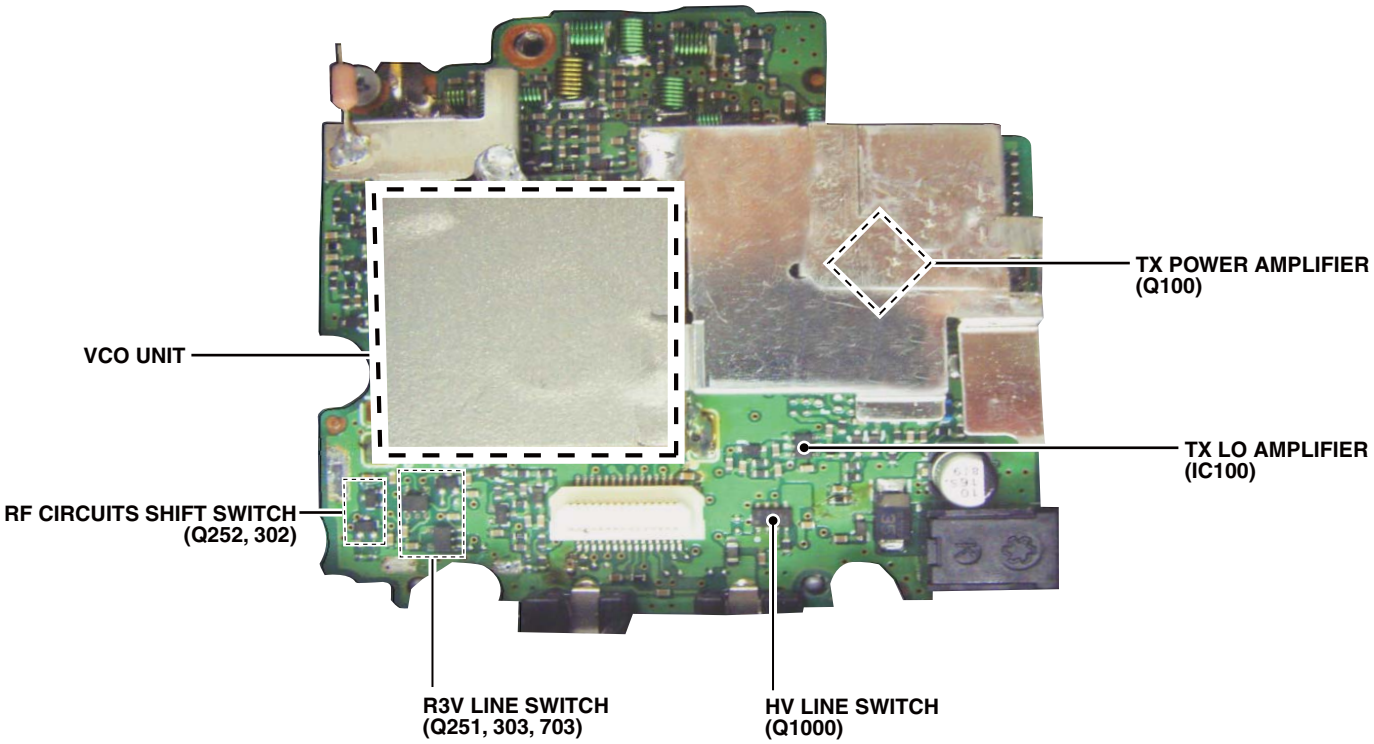
TX POWER AMPLIFIER
(Q100)
VCO UNIT
TX LO AMPLIFIER
(IC100)
RF CIRCUITS SHIFT SWITCH
(Q252, 302)
R3V LINE SWITCH
(Q251, 303, 703)
HV LINE SWITCH
(Q1000)

SECTION 3 DISASSEMBLY INSTRUCTION

1. Removing the rear panel

① Unscrew 2 screws Ⓐ and remove the plate Ⓑ.
② Unscrew 2 screws Ⓒ and 2 screws Ⓓ.
③ Disconnect the flat cable Ⓔ from MAIN UNIT.
④ Remove the rear panel.

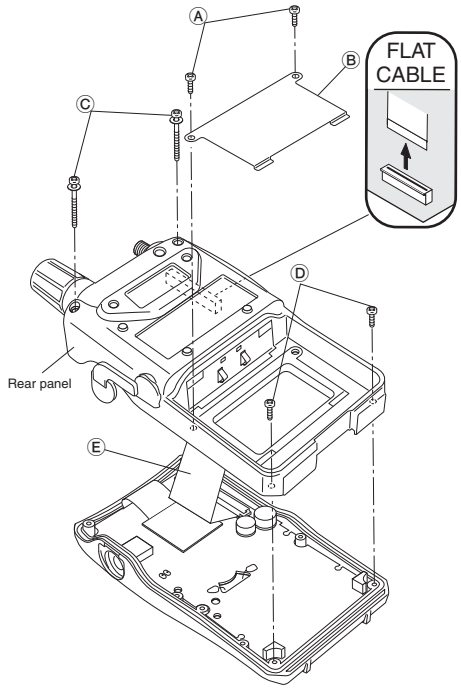

BE CAREFUL about the **flat cable** and **connector** when separating the CHASSIS UNIT from the FRONT UNIT.

2. Removing the MAIN UNIT

① Unsolder 5 points Ⓐ.
② Unscrew 3 screws Ⓑ.
③ Remove the MAIN UNIT from the rear panel.

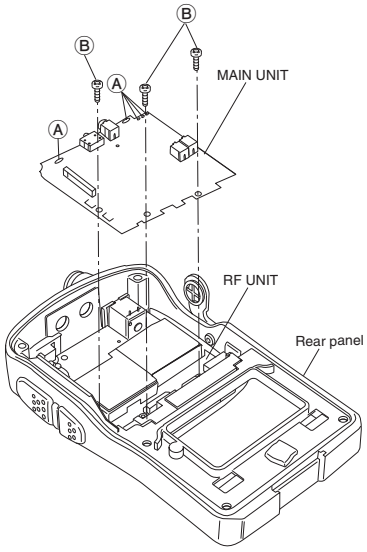

3. Removing the RF UNIT

① Unsolder 2 points Ⓐ.
② Unsolder 3 points Ⓑ and remove the shield plate Ⓒ.
③ Unscrew 4 screws Ⓓ and remove the RF UNIT from the rear panel.

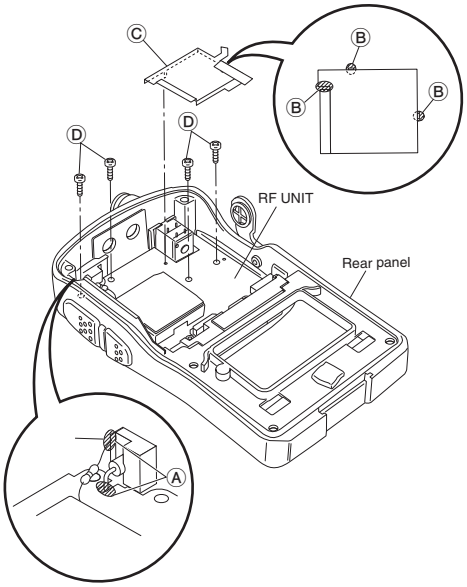

4. Removing the LOGIC UNIT

① Unsolder 2 points Ⓐ.
② Unscrew 6 screws Ⓑ and remove the LOGIC UNIT from the front panel.

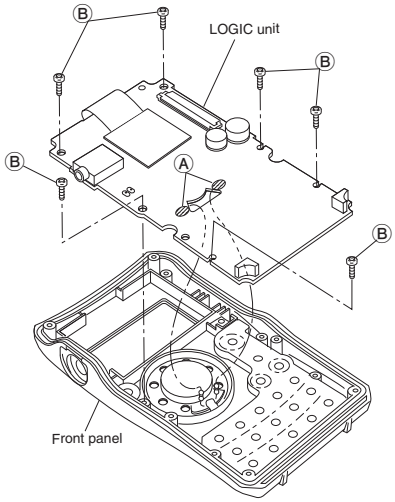

4-1 RECEIVER CIRCUITS

RF CIRCUITS (RF UNIT)

RX signals from the antenna are sorted by its frequency by the filters and gone through RF circuits for each bands.

• 76 MHz and below

The RX signals are passed through two LPFs, ANT SW, band SW and LPF. The RX signals are sorted by its frequency by band SWs.

• 0.495–29.995 MHz

The RX signals are passed through the band SW (D201) and LPF, and applied to tuned RF AMP (Q200). The amplified RX signals are applied to the 1st mixer (IC900) via two band SWs (D203 and D707).

• 30–75.995 MHz

The RX signals are passed through the band SW (D250) and tuned BPF, and applied to the RF AMP (Q250). The amplified RX signals are passed through tuned BPF, then applied to the 1st IF mixer (IC900) via two band SWs (D256 and D707).

• 76–117.995 MHz

The RX signals are passed through two LPFs, ANT SW, band SW (D300), LPF and another band SW (D301) in sequence, then applied to the RF AMP (Q300) via the tuned BPF. The amplified RX signals are passed through another tuned BPF, then applied to another RF AMP (Q301). The amplified RX signals are applied to the 1st mixer (IC900) via two band SWs (D311 and D707).

• 118–173.995 MHz

The RX signals are passed through two LPFs, ANT SW, and band SW (D400), then applied to the RF AMP (Q400). The amplified RX signals are passed through the tuned BPF, and applied to another RF AMP (Q401). The amplified RX signals are passed through tuned BPF, then applied to the 1st IF mixer (IC900) via two band SWs (D405 and D509).

• 174–259.995 MHz

The RX signals are passed through the LPF, HPF, ANT SW, ATT, band SW (D302), HPF and another band SW in sequence, then applied to the RF AMP (Q300) via the tuned BPF. The amplified RX signals are passed through another tuned BPF, then applied to another RF AMP (Q301). The amplified RX signals are applied to the 1st mixer (IC900) via two band SWs (D311 and D707).

• 260–349.995 MHz and 470–599.995 MHz

The RX signals are passed through the LPF, HPFANT SW, ATT, BAND SW and tuned BPF in sequence, then applied to the RF AMP (Q500). The amplified RX signals are passed through another 2-pole tuned BPF, and applied to another RF AMP (Q501). The amplified RX signals are then applied to the 1st mixer (IC900) via two band SWs (D508 and D707).

• 350–469.995 MHz

The RX signals are passed through the LPF, HPF, ANT SW, ATT, band SW and HPF in sequence, then applied to the RF AMP (Q600). The amplified RX signals are passed through the tuned BPF, and applied to the RF AMP (Q601). The amplified RX signals are passed through the BPF, then applied to the 1st mixer (IC900) via two band SWs (D606 and D707).

• 600–999.990 MHz

The RX signals are passed through the HPF, ATT and applied to the RF AMP (Q700). The amplified RX signals are passed through the tuned BPF, and applied to another RF AMP (Q701). The amplified RX signals are applied to the 1st mixer (IC900) via the band SWs (D706 and D707).

The RF attenuation which reduces RX signal level to –10 dB is carried out by D5, D9 and D701, by turning these PIN diodes ON using "ATT" signal.

• RF CIRCUITS

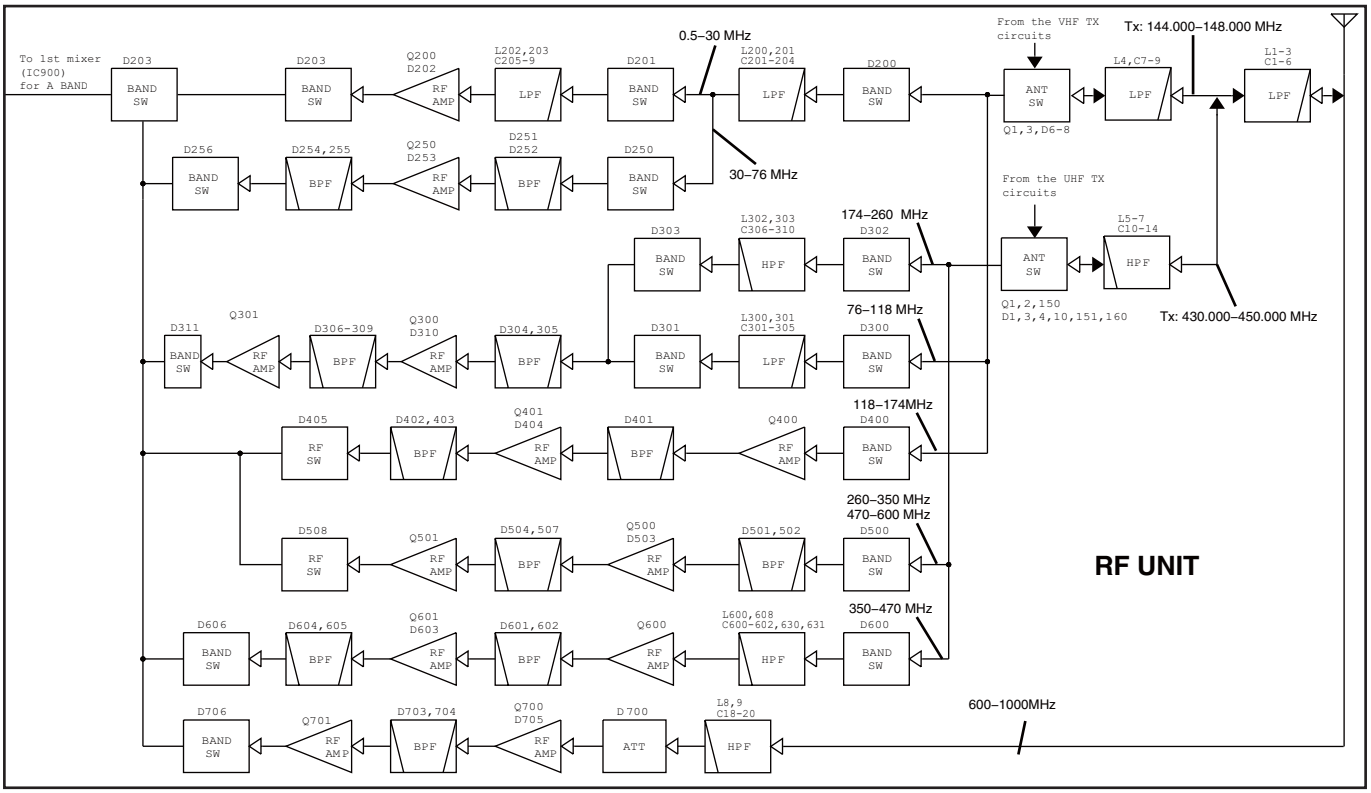

1ST IF CIRCUIT (MAIN UNIT)

The RX signals from the RF circuits are applied to the 1st mixer (RF: IC900) to be converted into the 1st IF signal, by being mixed with the 1st Local Oscillator (LO) signals from the VCO UNIT. The 1st LO signals from the VCO UNIT are applied to the 1st mixer via the LO SW, or doubler (in receiving of 600 MHz and above).

The converted 1st IF signal is passed through the IF SW (D2) which toggles the path of the 1st IF signal: WFM mode or other than WFM mode.

• FM/AM/DV MODE

The 1st IF signal from the 1st mixer (RF: IC900) is entered to the MAIN UNIT, and passed through the 1st IF filter (FI50) via IF SWs (D2, 3) to remove unwanted signals. The filtered 1st IF signals are applied to the 1st IF AMP (Q100), and the amplified 1st signal is applied to the 2nd IF circuit.

• WFM MODE (Incl. 2nd IF circuit)

When receiving in WFM mode, the 1st IF signal from the 1st mixer (RF: IC900) is entered to the MAIN UNIT and passed through the IF SW (D2) and BPF, then applied to the 1st IF AMP (Q1). The amplified 1st IF signal is applied to the 2nd mixer (Q2) to converted into the 13.35 MHz 2nd IF signal, by being mixed with the 45.9 MHz 2nd LO signal (generated by X450, tripled by Q451). The converted 2nd IF signal is passed through the 2nd IF filter (FI2) to remove sideband noise, then applied to the 2nd IF AMP (Q100) via the IF SW (D3). The amplified 2nd IF signal is applied to the 3rd IF circuit.

• 1ST IF CIRCUIT

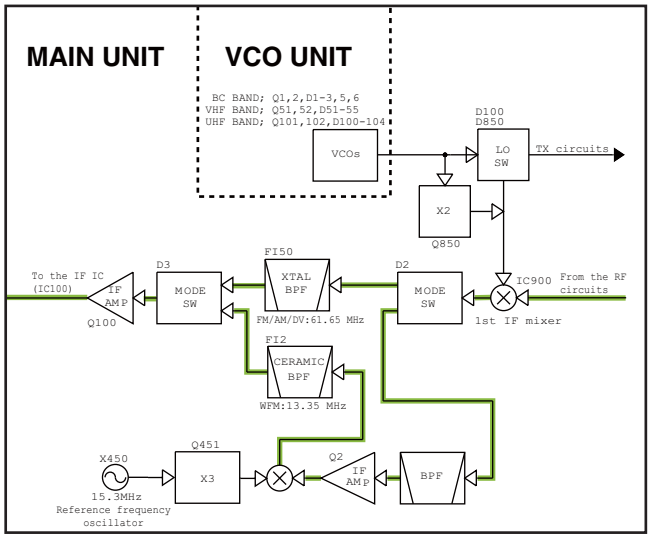

2ND IF AND DEMODULATOR CIRCUITS (MAIN UNIT)

<For FM, AM and DV mode>

The 1st IF signal from the 1st IF AMP (Q100) is applied to the IF IC (IC100). The applied 1st IF signal is mixed with the 61.2 MHz 2nd LO signal (generated by X450, buffered by Q452) at the internal 2nd mixer, to be converted into the 450 kHz 2nd IF signal. The converted 2nd IF signal is output from pin 3.

• FM MODE

The 2nd IF signal from the IF IC is passed through the 2nd IF filter (FI100) via IF SWs (D102, 103). The filtered 2nd IF signal is backed to the IF IC from pin 5, and saturation-amplified by the internal limit AMP. The amplified 2nd IF signal is FM-demodulated by the discriminator (X100), and the recovered AF signals (RX AF signals) are output from pin 9, then applied to the AF circuits via the FM mode SW (IC500D, pins 8, 9).

• AM MODE

The 2nd IF signal from the IF IC is passed through the 2nd IF filter (FI200) via IF SWs (D150, 151). The filtered 2nd IF signal is amplified by 2nd IF AMP (Q103), then applied to the AM demodulator circuit (Q104) to be recovered to the AF signals. The demodulated AF signals are applied to the AF circuits via the AM mode SW (IC500A).

• DV MODE

The 2nd IF signal from the IF IC is passed through the 2nd IF filter (FI100) via IF SWs (D102, 103). The filtered 2nd IF signal is backed to the IF IC from pin 5, then saturation-amplified by the internal limit AMP. The amplified 2nd IF signal is FM-demodulated by the discriminator (X200), and the recovered AF signals (RX AF signals) are output from pin 9, then applied to the AF circuits via the AF mute SW (IC500, pins 4, 3).

• 3RD IF CIRCUIT (MAIN UNIT)

<For WFM mode only>

The 2nd IF signal from the 2nd IF AMP (Q100) is applied to the IF IC.

The applied 2nd IF signal is mixed with the 15.3 MHz 3rd LO signal (generated by X450, buffered by Q452), to be converted into the 1.95 MHz 3rd IF signal by the internal 3rd mixer. The converted 3rd IF signal is output from pin 3, and passed through the IF SWs (D105, 106), then backed to the IF IC (bypassing FI100). The 3rd IF signal is FM-demodulated by the discriminator (X100), and the recovered AF signals (RX AF signals) are output from pin 9, then applied to the AF circuits via the WFM mode SW (IC500C, pins 8, 9).

• 2ND IF AND DEMODULATOR CIRCUITS

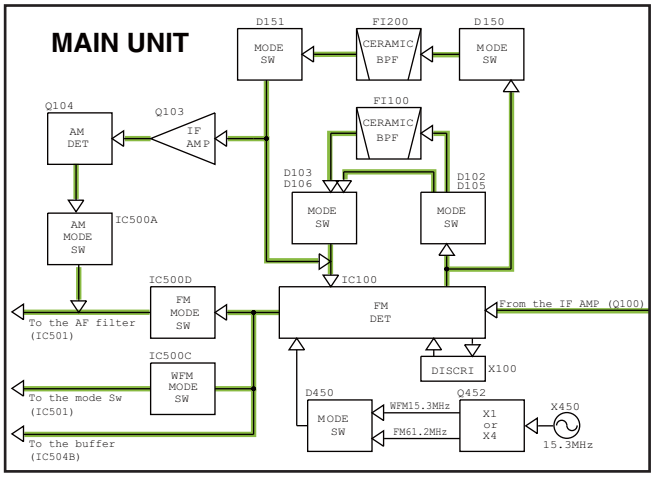

RX AF CIRCUITS (LOGIC UNIT)

• FM/W-FM/AM MODE

The AF signals from the FM/AM demodulator circuits are passed through the mode SW (MAIN UNIT: IC500D/C/A) and one of the AF filters whose audio frequency response is set as stable for each RX mode (FM/AM or WFM).

FM/AM-demodulated AF signals are filtered by IC501, and FM-demodulated AF signals (W-FM mode) are filtered by Q552.

The filtered AF signals are passed through the D/A converter (MAIN UNIT: IC600, pins 15, 14; 16, 17) for level adjustment. The level-adjusted AF signals are entered to the LOGIC UNIT, and applied to the AF power AMP (IC400) to obtain audio output power. The power-amplified AF signals are applied to the internal speaker or output from the [SP] jack.

• DV MODE

The FM-demodulated signals from the IF IC (MAIN UNIT: IC100) are applied to the modem (IC501) via the LPF and buffer (IC504B), to be converted into the DV data. The DV data is applied to the CPU (IC1), and converted into the AMBE signals. The AMBE signal is then applied to the DSP CODEC IC (IC506) and decoded. The decoded AMBE signals are converted into the analog audio signal by liner CODEC IC (IC503). The converted AF signals are passed through the mode SW (MAIN UNIT: IC500B) and AF filter (MAIN UNIT: IC501A).

The filtered AF signals are passed through the D/A converter (MAIN UNIT: IC600, pins 15, 14; 16, 17) for level adjustment. The level-adjusted AF signals are entered to the LOGIC UNIT, and applied to the AF power AMP (IC400) to obtain audio output power. The power-amplified AF signals are applied to the internal speaker or output from the [SP] jack.

SQUELCH CIRCUIT

The squelch circuit cuts off the AF output signals when no RF signals are received. Detecting noise components (approx. 30 kHz signals) in the demodulated AF signals, the squelch circuit stops audio signals being emitted.

A portion of FM-demodulated AF signal from the IF IC (MAIN UNIT: IC100) is passed through the DAC (MAIN UNIT: IC600) for level (=threshold) adjustment. The level-adjusted AF signals are passed through the noise filter (IC100, pins 7, 8 and R111–113, C121, 122) to filter the noise components (approx. 30 kHz signals) only. The noise components are rectified to produce DC voltage corresponding to the noise level.

If the noise level is higher than the preset one, the internal comparator set the "NOISE" signal to the CPU to "High", then the CPU turns the "AFON" signal which controlls the AF power AMP (L: IC400) to "Low," to inactivate the AF power AMP (L: IC400). At the same time, the CPU turns the "RMUTE" signal which controlls the AF mute SW (L: Q403, 404) to "Low," to cut-off the RX AF line.

NOISE SQUELCH DIAGRAM

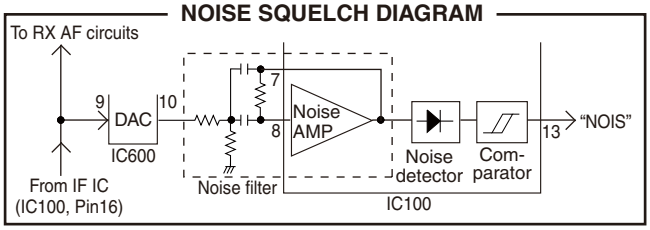

• RX AF CIRCUITS

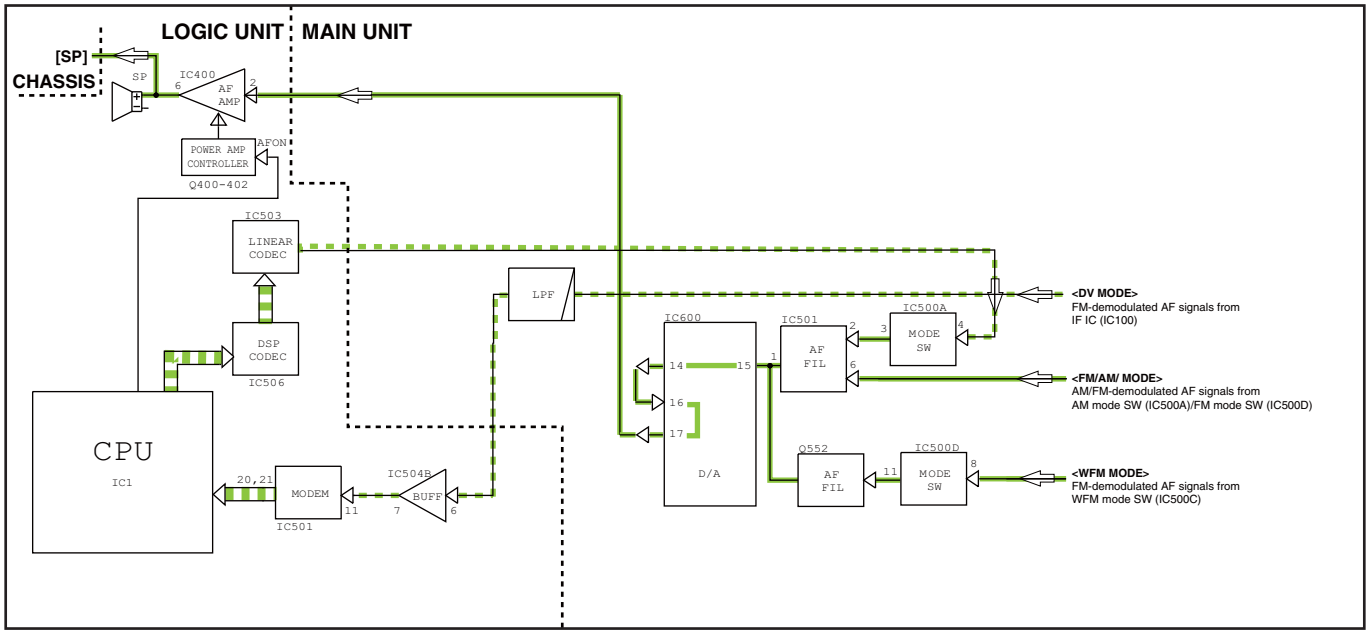

4-2 TRANSMITTER CIRCUITS

TX AF CIRCUITS (LOGIC UNIT)

• FM MODE

MIC signals from the internal/external microphone (MIC signals) are passed through the MIC gain SW (Q303), and applied to the MIC AMP (Q302, 304). The amplified MIC signals are passed through the mode SW (IC301) which toggles the MIC line according to the operating mode; FM or DV. The MIC signals are applied to the IDC (Instance Deviation Controller; IC302B) circuit which limits the amplitude of MIC signals (=deviation) to prevent over deviation.

The amplitude-limited MIC signals are passed through the splatter filter (IC302C) which cuts off the 3 kHz and higher audio signals. The frequency-limited MIC signals are entered to the MAIN UNIT via the mode SW (IC303), then applied to the DAC (MAIN UNIT: IC600) for level (=deviation) adjustment. The level-adjusted MIC signals are applied to the modulation circuits.

• DV MODE

The MIC signals from the microphone (MC300) are passed through the MIC gain SW (Q303) and applied to the MIC AMP (Q302, 304). The amplified MIC signals are applied to the ALC AMP (IC300) which automatically adjusts the level of MIC signals to stable for digital processing, via the mode SW (IC301). The level-adjusted MIC signals are applied to the IDC circuit (IC302B) for amplitude-limiting. The amplitude-limited MIC signals are passed through the splatter filter (IC302C) which cuts off the 3 kHz and higher audio signals.

The frequency-limited MIC signals are applied to the liner CODEC IC (IC503) via the buffer (IC504A), and encoded into the digital audio signal. The digital audio signal is then applied to the DSP CODEC IC (IC506) and converted into the AMBE signal. The AMBE signal is applied to the modem IC (IC501) via the CPU (IC1). The modem IC converts the AMBE signal into the analog signal, and output to the DAC (IC600, pin 1) via the buffer (IC302D) and the mode SW (IC303). The tone signal is level-adjusted by DAC (MAIN UNIT: IC600), then applied to the modulation circuits as the modulation signals.

• TX AF CIRCUITS

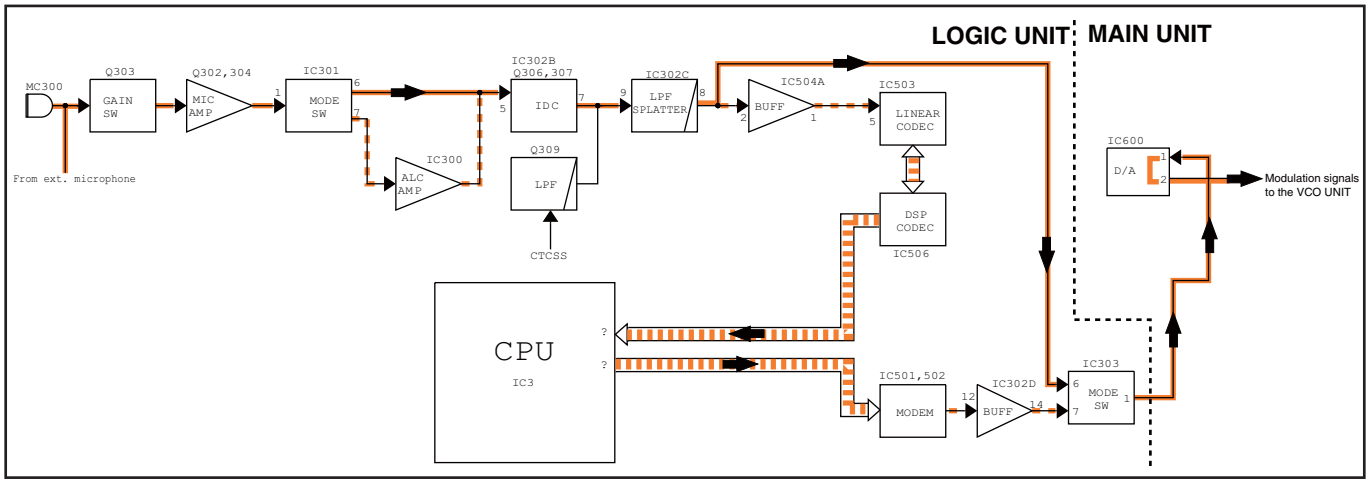

MODULATION CIRCUITS (VCO UNIT)

The modulation signals from the DAC (MAIN UNIT: IC600, pin 2) are entered to the VCO UNIT, and applied to the variable capacitors of VCOs.

• OPERATING ON VHF BAND

The modulation signals are applied to the D55 of the VHF VCO (Q51, 52, D51–55) to obtain FM modulation. The FM-modulated VCO output is buffer-amplified by Q200, amplified by Q201 then entered to the RF UNIT as TX signal.

• OPERATING ON UHF BAND

The modulation signals are applied to the D100 of the UHF VCO (Q101, 102, D100–104) to obtain FM modulation. The FM-modulated VCO output is buffer-amplified by Q200, amplified by Q201 then entered to the RF UNIT as TX signal.

TX AMPLIFIERS (RF UNIT)

TX signal from VCO UNIT is applied to the LO AMP (IC100) via the LO SW (D100). The amplified TX signal is passed through the ATT (D101, 102) which is a port of the APC circuit. The level-adjusted TX signal is amplified by YGR (Q102), drive (Q101) and power (Q100) amplifiers in sequence, to obtain TX output power. The power-amplified TX signal is passed through the TX filters, power detector and ANT SWs.

• OPERATION ON VHF BAND

The power-amplified TX signal from the power AMP (Q100) is passed through the LPF, ANT SW (D9, 61, 62), power detector (D59, 60) and two LPFs (as a harmonic filter), then applied to the antenna via ANT connector (CHASSIS; J1).

• OPERATION ON UHF BAND

The power-amplified TX signal from the power AMP (Q100) is passed through the BPF, power detector (D50, 53), ANT SW, HPF and LPF (as a harmonic filter), then applied to the antenna via ANT connector (CHASSIS; J1).

APC CIRCUIT (RF UNIT)

The APC (Automatic Power Control) circuit stabilizes transmit output power to prevent transmit output power level change which is caused by load mismatching or heat effect, etc.

TX signal is passed through the power detector (VHF; D59, 60/UHF; D50, 53). The power detector rectifies a portion of the TX signal and converts it into DC voltage which is in proportion to the transmit output power. The detected voltage is applied to the APC controller (IC150B). The TX power setting voltage "PSET" is applied to another input terminal as the reference voltage.

The output voltage is applied to the ATT (D101, 102) to control the attenuation level, to adjust the input level of the YGR AMP (Q102) so that the TX output power is stable.

The setting of TX power is carried out by applying voltage "PSET" to the APC controller (IC150B). The output voltage of the controller controls the bias of the drive and power AMPs to reduce/increase the gain of these amplifiers to set the TX output power to High, Mid., Low and S-Low.

• TX AMPLIFIERS AND APC CIRCUIT

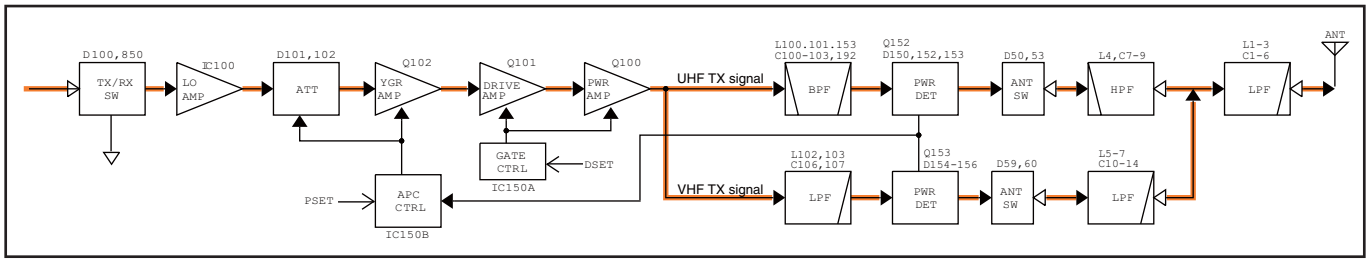

4-3 FREQUENCY SYNTHESIZER CIRCUITS

VCOs

This transceiver has total of five VCOs; one RX VCO and RX/TX VCOs on the VCO UNIT, and two RX VCOs on the MAIN UNIT.

• BC BAND VCO (VCO UNIT; Q1, D1, 3, 5, 6)

The BC BAND VCO generates the 1st LO for BC band (0.495–75.995 MHz) RX.

• VHF BAND VCO (VCO UNIT; Q51, D51, 54)

The VHF BAND VCO generates the 1st LO for VHF band (76–173.995 MHz) RX, and also TX signal for the operation on the VHF band.

• UHF BAND VCO (VCO UNIT; Q101, D101–104)

The UHF BAND VCO generates the LO for UHF band (174–599.995 MHz) RX, and also TX signal for the operation on the UHF band.

When receiving 600 MHz and higher signals, the UHF BAND VCO oscillates 269.175–469.17 MHz 1st LO signals, and the output signal is doubled by the doubler (MAIN UNIT; Q850, D851) before being applied to the mixer (MAIN UNIT; IC900).

PLL (VCO AND MAIN UNITS)

The PLL circuit provides stable oscillation for both of the transmit and 1st LO frequencies. By comparing the fedback VCO output and the reference frequency signal, the oscillating frequency is stabilized. The PLL output frequency is controlled by the serial data including divide ratio from the CPU.

A portion of output signals from each VCO are fedback to the PLL IC (MAIN UNIT: IC800) via buffers (VCO: Q200, 202) and LPF. The applied VCO outputs are divided by the prescaler and programmable divider, then phase-compared with divided reference frequency from X450 (MAIN). The phase difference is output via the charge pump, and applied to the VCOs as lock voltage via the loop filter.

When the oscillation frequency drifts, its phase changes from that of the reference frequency, causing a lock voltage change to compensate for the drift in the VCO oscillating frequency.

• FREQUENCY SYNTHESIZER CIRCUITS

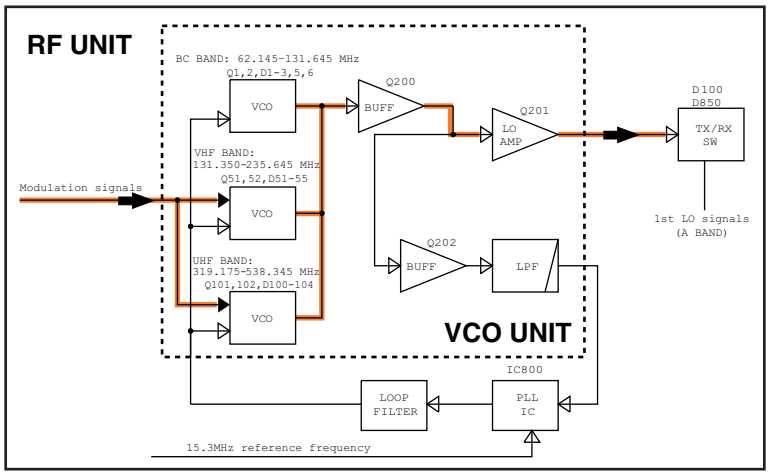

4-4 CPU (LOGIC UNIT: IC1) PORT ALLOCATION

PIN No.	LINE NAME	DESCRIPTION	IN/ OUT	STATUS	CONDITION
3	PCON	Transceiver power control.	OUT	H	While the transceiver power is ON.
4	AFMUTE	AF mute signal to the AF mute SW (LOGIC UNIT: Q403, 404).	OUT	H	AF mute.
5	MUTE	TX mute signal.	OUT	H	TX mute.
6	MICC	MIC AMP (LOGIC UNIT: Q304) control signal to the MIC AMP controller (LOGI UNIT: Q302).	OUT	L	MIC AMP is activated.
7	AFON	Control signal to the AF power AMP controller (LOGIC UNIT: Q400–402).	OUT	H	AF power AMP (L: IC400) is activated (Squelch open).
9	BATT	Power supply select signal to the power supply selector (LOGIC UNIT: IC1000).	OUT	H/L	H=Operated by the battery pack. L=Operated by an external power source.
10, 11	MIC1, MIC2	MIC gain control signals to the MIC gain controller (LOGIC UNIT: Q303).	OUT	–	–
12	ACQ	ACQ signal to the modem (LOGIC UNIT: IC501).	OUT	H	Synchronized.
14	RXDT	RX data to the modem (LOGIC UNIT: IC501).	IN	–	–
15	TXDT	TX data to the modem (LOGIC UNIT: IC501).	OUT	–	–
16	AMBEC	DSP IC power line regulator (LOGIC: IC508) control signal.	OUT	H	In DV mode operation.
18	DVC	Liner CODEC IC power line regulator (LOGIC UNIT: Q503, 504) control signal.	OUT	H	In DV mode operation.
20	PTT	[PTT] key input. (Pull-down)	IN	H	The key is pushed.
21	DASTB2	Strobe signal to the DAC (MAIN UNIT: IC600).	OUT	–	–
26	BTDET	Battery attach detect.	IN	L	A battery is attached.
27	RXCK	RX clock to the modem (LOGIC UNIT: IC501).	IN	–	–
28	TXCK	TX clock to the modem (LOGIC UNIT: IC501).	IN	–	–
34	LINH	LCD driver (LOGIC UNIT: IC603) chip-enable signal.	OUT	L	LCD display OFF.
35	LCE	Strobe signal to the LCD driver (LOGIC UNIT: IC603).	OUT	–	–
36	LDI	Serial data to the LCD driver (LOGIC UNIT: IC603).	OUT	–	–
37	LCL	Clock to the LCD driver (LOGIC UNIT: IC603).	OUT	–	–
38	BLED	[BUSY] LED driver (LOGIC UNIT: Q201) control signal.	OUT	H	While receiving (Squelch open).
39	TXLED	TX LED control signal.	OUT	H	Lights ON. (While transmitting)
40	LLIGHT	LCD backlight control signal.	OUT	L	Backlight ON.
41	KLIGHT	LCD/Key backlight driver (LOGIC UNIT: Q201) control signal.	OUT	L	Lights ON.
42	AMBECLK	AMBE clock signal to the DSP CODEC IC (LOGIC UNIT: IC506).	OUT	–	–
43	AMBERXD	AMBE RX data to the DSP CODEC IC (LOGIC UNIT: IC506).	IN	–	–
44	AMBETXD	AMBE TX data to the DSP CODEC IC (LOGIC UNIT: IC506).	OUT	–	–
45	AMBESTB	AMBE strobe signal to the DSP CODEC IC (LOGIC UNIT: IC506).	OUT	–	–
46	NOIS	Noise detect signal from the IF IC (MAIN UNIT: IC100).	IN	–	–
47	AMBERES	Reset signal to the liner CODEC IC and DSP CODEC IC (LOGIC UNIT: IC503 and IC506).	OUT	–	–
49	AMBEEPR	AMBEEPR signal to the DSP CODEC IC (LOGIC UNIT: IC506).	IN	–	–
50	DTCS	Tone filter response switching signal.	OUT	H	DTCS signals is in use.
51–55	KR0–KR4	Key detect signal. (Pushed button is detected according to the input voltage.)	IN	–	–
56	SQL	[SQL] key input. (Pull-up)	IN	L	The key is pushed.
57	DIUD	[DIAL] input (Phase B).	IN	–	–
59	DICK	[DIAL] input (Phase A).	IN	–	–
61–64	KS0–KS3	Key matrix ports.	OUT	–	–
69	IOSTB	Strobe signal to the expander (RF UNIT: IC951).	OUT	–	–
70	IOSTB1	Strobe signal to the expanders (MAIN UNIT: IC701, 702).	OUT	–	–
71	IOEN	Output enable signal to the expanders (MAIN UNIT: IC701, 702).	OUT	–	–
72	DASTB1	Strobe signal to the DAC (RF UNIT: IC950).	OUT	–	–
73	PLLSTB	Strobe signal to the PLL IC (MAIN UNIT: IC800).	OUT	–	–
74	DATA	Common serial data to the PLL ICs and DAC (LMX2313/ME15E03SL/ M62352AGP).	OUT	–	–
75	CK	Common clock signal to the the PLL ICs and DAC (LMX2313/ ME15E03SL/M62352AGP).	OUT	–	–

4-4 CPU PORT ALLOCATION (continued)

PIN No.	LINE NAME	DESCRIPTION	IN/ OUT	STATUS	CONDITION
77	RESET	Reset signal from the reset IC (LOGIC UNIT: IC100).	IN	H	–
79	UNLK	Unlock signal from the PLL IC (MAIN UNIT: IC800).	IN	H	PLL is locked.
85	RX232	RS-232 data (RXD).	IN	–	–
86	TX232	RS-232 data (TXD).	OUT	–	–
89	CLSFT	Clock frequency shift signal to the clock oscillator (LOGIC UNIT: X1, D13).	OUT	H	–
90	PPS	Power save mode control signal to theD PLL IC (MAIN UNIT: IC800).	OUT	L	In power save mode.
91	CHGC	Charging control signal to the charge circuit (LOGIC UNIT: Q150–153, D150, 151)	OUT	H	While charging.
92	CHGH	Charging current control signal to the charging controller (LOGIC UNIT: Q150, 152).	OUT	H	Charging current increase.
97	TEMP	The voltage in proportion to the internal temperature. The voltage divided by R66 (thermistor; LOGIC UNIT) and R67 (LOGIC UNIT).	IN	–	–
98	RTONE	Weather alert signals.	IN	–	–
96	VIN	DC voltage divided by the voltage detect resisters (LOGIC UNIT: R159 and R160). (Remaining battery capacity detection.)	IN	–	–
99	CTONE	CTCSS signals.	IN	–	–
100	RSSI	RSSI voltage from the IF IC (MAIN UNIT: IC100).	IN	–	–
101	TX-V	• While operated by batteryRSSI voltage from the IF IC (MAIN UNIT: IC100). • While perated by external power supplyCurrent in TX from the I-V converter (MAIN UNIT: IC800).	IN	–	–
102	TTEMP	The voltage in proportion to the TX power AMP (RF UNIT: Q100) temperature.The voltage divided by R161 (thermistor; RF UNIT) and R162 (RF UNIT).	IN	–	–
103	CTCOUT	CTCSS/DTCS signals.	OUT	–	–
104	DTMF	Tone (DTMF, european tone: IC-E80D only) signals.	OUT	–	–
109	CPUHV	External power supply detection.	IN	L	External power supply is connected.
110	POWER	[POWER] key input. (Pull-up)	IN	L	The key is pushed.
111	D_AS	Analog/Digital mode switching signal.	IN	H	Analog mode.
113	ECK	Clock to the EEPROM (LOGIC UNIT: IC51).	OUT	–	–
114	ESIO	Serial data to the EEPROM (LOGIC UNIT: IC51).	IN/ OUT	–	–
116	CLIN	Key detect signal. (Pushed button is detected by refering input voltage.)	IN	–	–
118	CLOUT	Cloning data.	OUT	–	–

4-5 VOLTAGE BLOCK DIAGRAM

Voltage from the power supply is routed to the whole of the transceiver via regulators and switches.

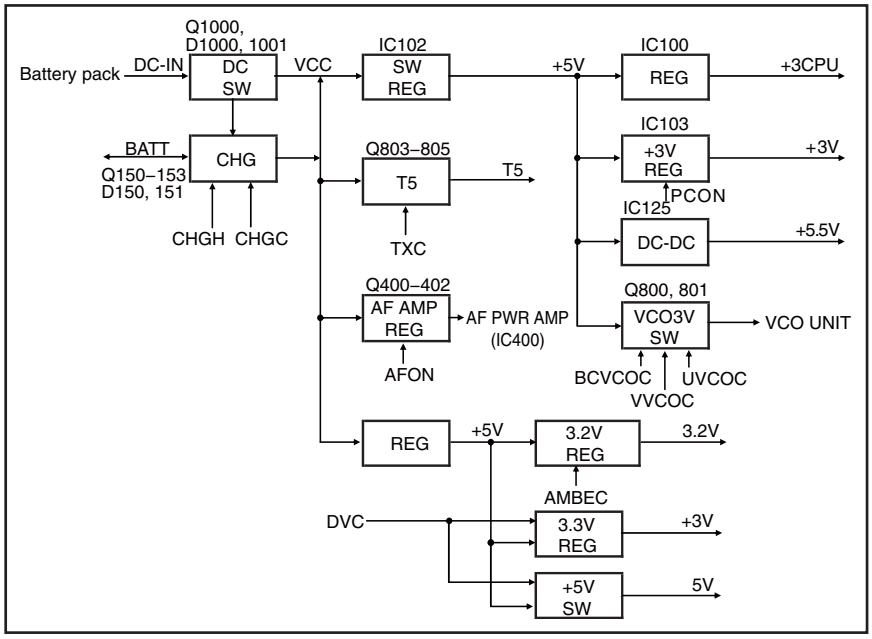

SECTION 5 ADJUSTMENT PROCEDURE

5-1 PREPARATION

■ REQUIRED INSTRUMENTS

INSTRUMENTS	SPECIFICATION	INSTRUMENTS	SPECIFICATION
DC Cables	• OPC-254L (Optional product) • Connects to battery terminals	JIG cables	(See the illust below)
Power Supply	Output voltages : 13.5 V DC 7.4 V DC 5.0 V DC Current capacity : More than 3 A	Multimeter	Input impedance : 50 kΩ Measuring range : 0.1–10V/0.01–5 A
RF Power Meter (terminated type)	Measuring range : 0.1–10 W Frequency range : 100–500 MHz Impedance : 50 Ω SWR : Less than 1.2 : 1	Standard Signal Generator (SSG)	Frequency range : 0.1–1200 MHz Output level : –20 to 90 dBμ (–127 to 90 dBm)
Frequency Counter	Frequency range : 0.1–600 MHz Frequency accuracy : ±1 ppm or better Input level : Less than 1 mW	AC Millivoltmeter	Measuring range : 10 mV to 10 V
		Attenuator	Power attenuation : 30 dB Capacity : More than 10 W
Modulation Analyzer	Frequency range : 30–600 MHz Measuring range : 0 to ±10 kHz	Audio Generator	Frequency range : 300–3000 Hz Output level : 1–500 mV

■ JIG CABLES

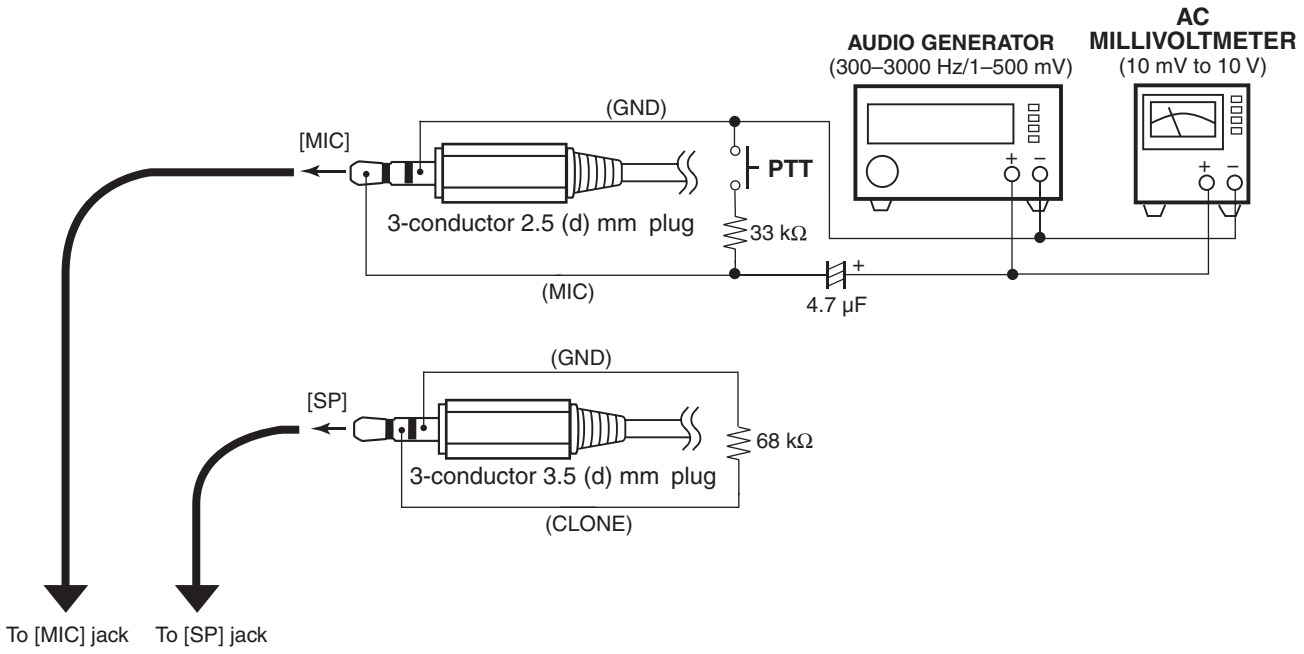

CONNECTION

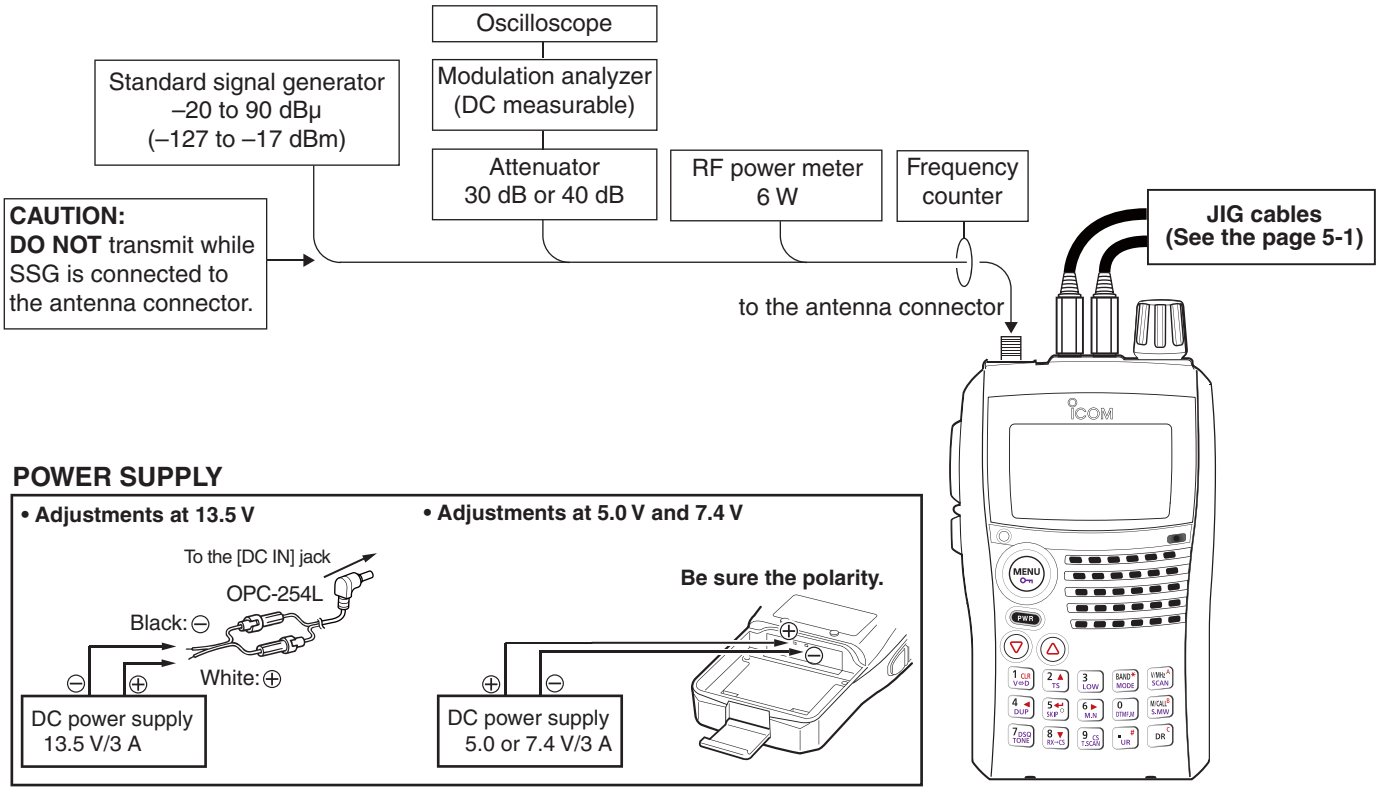

ENTERING ADJUSTMENT MODE

① Turn the transceiver power OFF.
② Connect JIG cables (See the page 5-1) to the **[MIC]** and **[SP]** jacks.
③ Push and **[SQL]** and **[8]**, turn the transceiver power ON.
Entering adjustment mode, the function display shows the adjustment item and conditions as below.

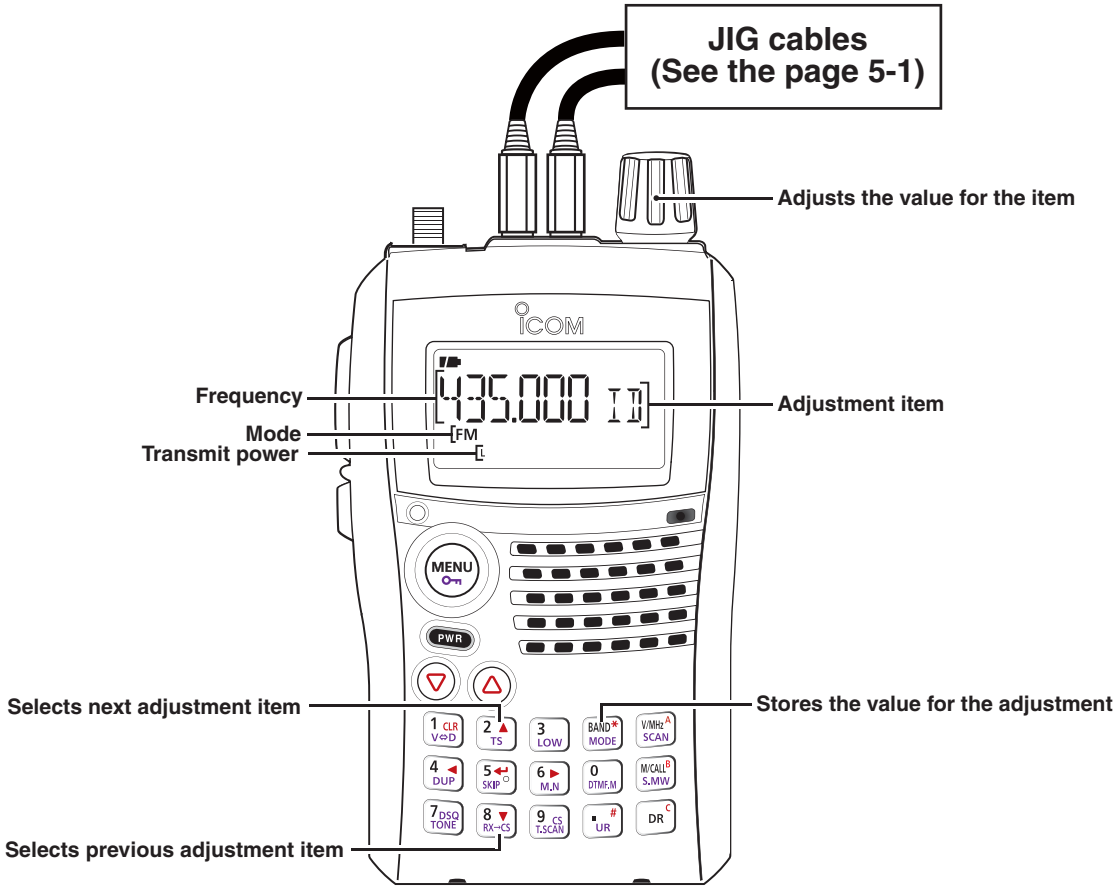

QUITTING ADJUSTMENT MODE

① Turn the transceiver power OFF.
② Disconnect the JIG cable, then turn the power OFF.

5-2 FREQUENCY ADJUSTMENT

Select an adjustment item using **[2]** / **[8]**, then set the adjustment value as specified using **[DIAL]**.

ADJUSTMENT	ADJUSTMENT ITEM	OPERATION		VALUE
REFERENCE FREQUENCY	[FR]	1	1) Set the power supply voltage to 7.4 V. 2) Connect an RF power meter to the antenna connector. 3) Loose couple a frequency counter to the antenna connector. 4) While transmitting, adjust the frequency using **[DIAL]**, then push **[BAND]** to store the adjustment value.	440.0000 MHz (±200 Hz)

5-3 IDLING CURRENT ADJUSTMENT (at 5.0 V)

Select an adjustment item using **[2]** / **[8]**, then set the adjustment value as specified using **[DIAL]**.

ADJUSTMENT	ADJUSTMENT ITEM	OPERATION		VALUE
DRIVE AMP IDLING CURRENT	[ID5]	1	1) Set the power supply voltage to 5.0 V. 2) Connect an RF power meter to the antenna connector. 3) Connect a multimeter between the power supply and transceiver. 4) Set the item **[IP5]** to "00."	–
[VHF BAND]		2	• While transmitting, adjust the idling current using **[DIAL]**, then push **[BAND]** to store the adjustment value.	180–230 mA
[UHF BAND]		3		150–200 mA
FINAL AMP IDLING CURRENT	[IP5]	1	1) Set the power supply voltage to 5.0 V. 2) Connect an RF power meter to the antenna connector. 3) Connect a multimeter between the power supply and transceiver.	–
[VHF BAND]		2	• While transmitting, adjust the idling current using **[DIAL]**, then push **[BAND]** to store the adjustment value.	200–300 mA
[UHF BAND]		3		
NOTE: When "**IDLING CURRENT**" is adjusted, "**TRANSMIT POWER**" must be re-adjusted too.				

5-4 IDLING CURRENT ADJUSTMENT (at 7.4 V)

Select an adjustment item using **[2]** / **[8]**, then set the adjustment value as specified using **[DIAL]**.

ADJUSTMENT	ADJUSTMENT ITEM		OPERATION	VALUE
DRIVE AMP IDLING CURRENT	[ID7]	1	1) Set the power supply voltage to 7.4 V. 2) Connect an RF power meter to the antenna connector. 3) Connect a multimeter between the power supply and transceiver. 4) Set the item **[IP7]** to "00."	–
[VHF BAND] (Hi power)		2	• While transmitting, adjust the idling current using **[DIAL]**, then push **[BAND]** to store the adjustment value.	180–230 mA
(Mid power)		3		
(Low power)		4		
(S-Low power)		5		
[UHF BAND] (Hi power)		6		150–200 mA
(Mid power)		7		
(Low power)		8		
(S-Low power)		9		
FINAL AMP IDLING CURRENT	[IP7]	1	1) Set the power supply voltage to 7.4 V. 2) Connect an RF power meter to the antenna connector. 3) Connect a multimeter between the power supply and transceiver.	–
[VHF BAND] (Hi power)		2	• While transmitting, adjust the idling current using **[DIAL]**, then push **[BAND]** to store the adjustment value.	1.15 A
(Mid power)		3		650 mA
(Low power)		4		250 mA
(S-Low power)		5		
[UHF BAND] (Hi power)		6		1.15 A
(Mid power)		7		650 mA
(Low power)		8		250 mA
(S-Low power)		9		
NOTE: When "**IDLING CURRENT**" is adjusted, "**TRANSMIT POWER**" must be re-adjusted too.				

5-5 IDLING CURRENT ADJUSTMENT (at 13.5 V)

Select an adjustment item using **[2]** / **[8]**, then set the adjustment value as specified using **[DIAL]**.

ADJUSTMENT	ADJUSTMENT ITEM		OPERATION	VALUE
DRIVE AMP IDLING CURRENT	[ID1]	1	1) Set the power supply voltage to 13.5 V. (supplying from **[DC IN]**) 2) Connect an RF power meter to the antenna connector. 3) Connect a multimeter between the power supply and transceiver. 4) Set the item **[IP1]** to "00."	–
[VHF BAND] (Hi power)		2	• While transmitting, adjust the idling current using **[DIAL]**, then push **[BAND]** to store the adjustment value.	180–230 mA
(Mid power)		3		
(Low power)		4		
(S-Low power)		5		
[UHF BAND] (Hi power)		6		150–200 mA
(Mid power)		7		
(Low power)		8		
(S-Low power)		9		
FINAL AMP IDLING CURRENT	[IP1]	1	1) Set the power supply voltage to 13.5 V. (supplying from **[DC IN]**) 2) Connect an RF power meter to the antenna connector. 3) Connect a multimeter between the power supply and transceiver.	–
[VHF BAND] (Hi power)		2	• While transmitting, adjust the idling current using **[DIAL]**, then push **[BAND]** to store the adjustment value.	700 mA
(Mid power)		3		400 mA
(Low power)		4		250 mA
(S-Low power)		5		
[UHF BAND] (Hi power)		6		900 mA
(Mid power)		7		400 mA
(Low power)		8		250 mA
(S-Low power)		9		
NOTE: When "**IDLING CURRENT**" is adjusted, "**TRANSMIT POWER**" must be re-adjusted too.				

5-6 TRANSMIT POWER ADJUSTMENT (at 5.0 V)

Select an adjustment item using **[2]** / **[8]**, then set the adjustment value as specified using **[DIAL]**.

ADJUSTMENT	ADJUSTMENT ITEM		OPERATION	VALUE
TRANSMIT POWER	[PO5]	1	1) Set the power supply voltage to 5.0 V. 2) Connect an RF power meter to the antenna connector. 3) While transmitting, adjust the TX power using **[DIAL]**, then push **[BAND]** to store the adjustment value.	80–120 mW
[VHF (BAND LOW)]		2		
[VHF (BAND HIGH)]		3		
[UHF (BAND LOW)]		4		
[UHF (BAND HIGH)]		5		

5-7 TRANSMIT POWER ADJUSTMENT (at 7.4 V)

Select an adjustment item using **[2]** / **[8]**, then set the adjustment value as specified using **[DIAL]**.

ADJUSTMENT	ADJUSTMENT ITEM		OPERATION	VALUE
TRANSMIT POWER	[PO7]	1	1) Set the power supply voltage to 7.4 V. 2) Connect an RF power meter to the antenna connector.	–
(Hi power) [VHF (BAND LOW)]		2	• While transmitting, adjust the TX power using **[DIAL]**, then push **[BAND]** to store the adjustment value.	4.8–5.2 W
[VHF (BAND HIGH)]				
(Hi power) [UHF (BAND LOW)]		3		5.0–5.4 W
[UHF (BAND HIGH)]				4.6–5.0 W
(Mid power) [VHF (BAND LOW)]		4		2.3–2.7 W
[VHF (BAND HIGH)]				
(Mid power) [UHF (BAND LOW)]		5		
[UHF (BAND HIGH)]				
(Low power) [VHF (BAND LOW)]		6		0.4–0.6 W
[VHF (BAND HIGH)]				
(Low power) [UHF (BAND LOW)]		7		
[UHF (BAND HIGH)]				
(S-Low power) [VHF (BAND LOW)]		8		80–120 mW
[VHF (BAND HIGH)]				
(S-Low power) [UHF (BAND LOW)]		9		
[UHF (BAND HIGH)]				

5-8 TRANSMIT POWER ADJUSTMENT (at 13.5 V)

Select an adjustment item using **[2]** / **[8]**, then set the adjustment value as specified using **[DIAL]**.

ADJUSTMENT	ADJUSTMENT ITEM		OPERATION	VALUE
TRANSMIT POWER	–	1	1) Set the power supply voltage to 13.5 V. (supplying from **[DC IN]**) 2) Connect an RF power meter to the antenna connector.	–
(Hi power) [VHF (BAND LOW)]	[PO1]	2	• While transmitting, adjust the TX power using **[DIAL]**, then push **[BAND]** to store the adjustment value.	4.8–5.2 W
[VHF (BAND HIGH)]		3		
(Hi power) [UHF (BAND LOW)]		4		5.0–5.4 W
[UHF (BAND HIGH)]		5		4.6–5.0 W
(Mid power) [VHF (BAND LOW)]		6		2.3–2.7 W
[VHF (BAND HIGH)]		7		
(Mid power) [UHF (BAND LOW)]		8		
[UHF (BAND HIGH)]		9		
(Low power) [VHF (BAND LOW)]		10		0.4–0.6 W
[VHF (BAND HIGH)]		11		
(Low power) [UHF (BAND LOW)]		12		
[UHF (BAND HIGH)]		13		
(S-Low power) [VHF (BAND LOW)]		14		80–120 mW
[VHF (BAND HIGH)]		15		
(S-Low power) [UHF (BAND LOW)]		16		
[UHF (BAND HIGH)]		17		

5-9 DEVIATION ADJUSTMENTS

Select an adjustment item using **[2]** / **[8]**, then set the adjustment value as specified using **[DIAL]**.

ADJUSTMENT	ADJUSTMENT ITEM		OPERATION	VALUE
FM DEVIATION	[FMV]	1	1) Set the power supply voltage to 7.4 V. 1) Connect a modulation analyzer to the antenna connector through an attenuator, and set is as; HPF : OFF LPF : 20 kHz De-emphasis : OFF Detector : (P-P)/2 2) Connect an audio generator to the JIG cable (See the page 5-1).	–
(Mod. Freq. =1 kHz) **[VHF (BAND LOW)]**		2	1) Set the audio generator as; Frequency : 1 kHz Level : 90 mVrms 2) While transmitting, adjust the deviation using **[DIAL]**, then push **[BAND]** to store the adjustment value.	4.1–4.3 kHz
[VHF (BAND HIGH)]		3		
[UHF (BAND LOW)]		4		
[UHF (BAND HIGH)]		5		
(Mod. Freq. =300 Hz) **[VHF (BAND LOW)]**	[FMR]	1	1) Set the audio generator as; Frequency : 300 Hz Level : 90 mVrms 2) While transmitting, adjust the deviation using **[DIAL]**, then push **[BAND]** to store the adjustment value.	3.5–3.6 kHz
[VHF (BAND HIGH)]		2		
[UHF (BAND LOW)]		3		3.7–3.8 kHz
[UHF (BAND HIGH)]		4		
DV DEVIATION	–	1	1) Set the power supply voltage to 7.4 V. 1) Connect a modulation analyzer to the antenna connector through an attenuator, and set is as; HPF : OFF LPF : 20 kHz De-emphasis : OFF Detector : (P-P)/2 2) Connect an audio generator to the JIG cable (See the page 5-1), and set it as; Frequency : 1 kHz Level : 90 mVrms.	–
(VCO MODULATION) **[VHF (BAND LOW)]**	[DVV]	2	• While transmitting, adjust the deviation using **[DIAL]**, then push **[BAND]** to store the adjustment value.	1.1–1.3 kHz
[VHF (BAND HIGH)]		3		
[UHF (BAND LOW)]		4		
[UHF (BAND HIGH)]		5		
(REF. MODULATION) **[VHF (BAND LOW)]**	[DVR]	6		Minimum deviation
[VHF (BAND HIGH)]		7		
[UHF (BAND LOW)]		8		
[UHF (BAND HIGH)]		9		

5-10 TONE DEVIATION ADJUSTMENTS

Select an adjustment item using **[2]** / **[8]**, then set the adjustment value as specified using **[DIAL]**.

ADJUSTMENT	ADJUSTMENT ITEM		OPERATION	VALUE
TONES DEVIATION	[DT]	1	1) Set the power supply voltage to 7.4 V. 2) Connect a modulation analyzer to the antenna connector through an attenuator, and set is as; HPF : OFF LPF : 20 kHz De-emphasis : OFF Detector : (P-P)/2 3) No audio signals are applied.	–
[DTMF] (VHF) **(UHF)**		2	• While transmitting, adjust the deviation using **[DIAL]**, then push **[BAND]** to store the adjustment value.	3.4–3.6 kHz
[EUROPEAN TONE] (VHF) **(UHF)**	[EUR]	3		
[CTCSS] (VHF) **(UHF)**	[CT]	4		0.75–0.85 kHz
[DTCS] (VHF) **(UHF)**	[DTC]	5		0.7–0.8 kHz

5-11 RECEIVE SENSITIVITY ADJUSTMENTS

1) Select an adjustment item (band) using **[2]** / **[8]**.
2) Set the SSG as specified (frequency, deviation and output level).
3) Push the **[BAND]** to adjust (automatic) and store the adjustment value.

ADJUSTMENT	ADJUSTMENT ITEM		OPERATION	VALUE
RECEIVE SENSITIVITY	**NOTE:** "**RECEIVE SENSITIVITY**" must be adjusted before "**S-METER**." Otherwise, "**S-METER**" will not be adjusted properly.			
	[Tr]	1	1) Set the power supply voltage to 7.4 V. 2) Connect an SSG to the antenna connector and set as; Modulation : 1 kHz Deviation : 3.5 kHz	Push [BAND]. (Automatic adjustment)
[30.1 MHz*]		2	• Set the SSG as; Frequency : (Displayed on the function display) Level : 0 dBμ (–107 dBm)†	
[49.9 MHz*]		3	• Set the SSG as; Frequency : (Displayed on the function display) Level : 0 dBμ (–107 dBm)†	
[50.1 MHz*]		4	• Set the SSG as; Frequency : (Displayed on the function display) Level : 0 dBμ (–107 dBm)†	
[75.9 MHz*]		5	• Set the SSG as; Frequency : (Displayed on the function display) Level : 0 dBμ (–107 dBm)†	
[76.1 MHz*]		6	• Set the SSG as; Frequency : (Displayed on the function display) Level : 0 dBμ (–107 dBm)†	
[90.2 MHz*]		7	• Set the SSG as; Frequency : (Displayed on the function display) Level : 0 dBμ (–107 dBm)†	
[117.9 MHz*]		8	• Set the SSG as; Frequency : (Displayed on the function display) Level : 0 dBμ (–107 dBm)†	
[118.1 MHz*]		9	• Set the SSG as; Frequency : (Displayed on the function display) Level : –3 dBμ (–110 dBm)†	
[146.1 MHz*]		10	• Set the SSG as; Frequency : (Displayed on the function display) Level : –3 dBμ (–110 dBm)†	
[173.9 MHz*]		11	• Set the SSG as; Frequency : (Displayed on the function display) Level : –3 dBμ (–110 dBm)†	
[174.1 MHz*]		12	• Set the SSG as; Frequency : (Displayed on the function display) Level : 0 dBμ (–107 dBm)†	
[222.1 MHz*]		13	• Set the SSG as; Frequency : (Displayed on the function display) Level : 0 dBμ (–107 dBm)†	
[259.9 MHz*]		14	• Set the SSG as; Frequency : (Displayed on the function display) Level : 0 dBμ (–107 dBm)†	
[260.2 MHz*]		15	• Set the SSG as; Frequency : (Displayed on the function display) Level : 0 dBμ (–107 dBm)†	
[305.2 MHz*]		16	• Set the SSG as; Frequency : (Displayed on the function display) Level : 0 dBμ (–107 dBm)†	
[349.9 MHz*]		17	• Set the SSG as; Frequency : (Displayed on the function display) Level : 0 dBμ (–107 dBm)†	
[350.1 MHz*]		18	• Set the SSG as; Frequency : (Displayed on the function display) Level : –3 dBμ (–110 dBm)†	
[440.1 MHz*]		19	• Set the SSG as; Frequency : (Displayed on the function display) Level : –3 dBμ (–110 dBm)†	

†; This output level of a standard signal generator (SSG) is indicated as SSG's open circuit.
*; This frequency is an example only, and may differ from the actual frequency displayed on the function display.

5-11 RECEIVE SENSITIVITY ADJUSTMENT (continued)

1) Select an adjustment item (band) using **[2]** / **[8]**.
2) Set the SSG as specified (frequency, deviation and output level).
3) Push the **[BAND]** to adjust (automatic) and store the adjustment value.

ADJUSTMENT	ADJUSTMENT ITEM	OPERATION		VALUE
[469.9 MHz*]	[Tr]	20	• Set the SSG as; Frequency : 469.9 MHz Level : –3 dBμ (–110 dBm)†	Push [BAND]. (Automatic adjustment)
[470.1 MHz*]		21	• Set the SSG as; Frequency : 470.1 MHz Level : 0 dBμ (–107 dBm)†	
[535.1 MHz*]		22	• Set the SSG as; Frequency : 535.1 MHz Level : 0 dBμ (–107 dBm)†	
[599.9 MHz*]		23	• Set the SSG as; Frequency : 599.9 MHz Level : 0 dBμ (–107 dBm)†	
[600.1 MHz*]		24	• Set the SSG as; Frequency : 600.1 MHz Level : 0 dBμ (–107 dBm)†	
[780.1 MHz*]		25	• Set the SSG as; Frequency : 780.1 MHz Level : 0 dBμ (–107 dBm)†	
[999.9 MHz*]		26	• Set the SSG as; Frequency : 999.9 MHz Level : 0 dBμ (–107 dBm)†	

†; This output level of a standard signal generator (SSG) is indicated as SSG's open circuit.
*; This frequency is an example only, and may differ from the actual frequency displayed on the function display.

5-12 S-METER ADJUSTMENT

1) Select an adjustment item using **[2]** / **[8]**.
2) Set the SSG as specified (frequency, deviation and output level).
3) Push the **[BAND]** to adjust (automatic) and store the adjustment value.

ADJUSTMENT	ADJUSTMENT ITEM		OPERATION	VALUE
S-METER CURVE	**NOTE:** "**RECEIVE SENSITIVITY**" must be adjusted before "**S-METER CURVE**" and "**S-METER S3 LEVLE.**" Otherwise, "**S-METER CURVE**" and "**S-METER S3 LEVLE** will not be adjusted properly.			
	–	1	1) Set the power supply voltage to 7.4 V. 2) Connect an SSG to the antenna connector and set as; Modulation : 1 kHz Deviation : 3.5 kHz	–
[145.1 MHz* (S0 level)]	[S0]	2	• Set the SSG as; Frequency : (Displayed on the function display) Level : –8 dBμ (–115 dBm)†	Push **[BAND]**. (Automatic adjustment)
[145.1 MHz* (S3 level)]	[S3]		• Set the SSG as; Level : –6 dBμ (–113 dBm)†	
[145.1 MHz* (Full scale)]	[SF]		• Set the SSG as; Level : –2 dBμ (–109 dBm)†	
[87.5 MHz* (S0 level)]	[S0]	3	• Set the SSG as; Frequency : (Displayed on the function display) Deviation : 52.5 kHz Level : 2 dBμ (–105 dBm)†	
[87.5 MHz* (S3 level)]	[S3]		• Set the SSG as; Level : 5 dBμ (–102 dBm)†	
[87.5 MHz* (Full scale)]	[SF]		• Set the SSG as; Level : 25 dBμ (–82 dBm)†	
S-METER S3 LEVEL (FM)	[S3]	1	1) Set the power supply voltage to 7.4 V. 2) Connect an SSG to the antenna connector and set as; Modulation : 1 kHz Deviation : 3.5 kHz	–
[1.01 MHz*]		2	• Set the SSG as; Frequency : (Displayed on the function display) Level : –6 dBμ (–113 dBm)†	Push **[BAND]**. (Automatic adjustment)
[15.1 MHz*]		3	• Set the SSG as; Frequency : (Displayed on the function display) Level : –8 dBμ (–115 dBm)†	
[40.1 MHz*]		4	• Set the SSG as; Frequency : (Displayed on the function display) Level : –6 dBμ (–113 dBm)†	
[60.1 MHz*]		5	• Set the SSG as; Frequency : (Displayed on the function display) Level : –6 dBμ (–113 dBm)†	
[220.1 MHz*]		6	• Set the SSG as; Frequency : (Displayed on the function display) Level : –6 dBμ (–113 dBm)†	
[305.2 MHz*]		7	• Set the SSG as; Frequency : (Displayed on the function display) Level : –6 dBμ (–113 dBm)†	
[435.1 MHz*]		8	• Set the SSG as; Frequency : (Displayed on the function display) Level : –6 dBμ (–113 dBm)†	
[535.1 MHz*]		9	• Set the SSG as; Frequency : (Displayed on the function display) Level : –6 dBμ (–113 dBm)†	
[800.1 MHz*]		10	• Set the SSG as; Frequency : (Displayed on the function display) Level : 0 dBμ (–107 dBm)†	

†; This output level of a standard signal generator (SSG) is indicated as SSG's open circuit.
*; This frequency is an example only, and may differ from the actual frequency displayed on the function display.

5-12 S-METER ADJUSTMENT (continued)

1) Select an adjustment item using **[2]** / **[8]**.
2) Set the SSG as specified (frequency, deviation and output level).
3) Push the **[BAND]** to adjust (automatic) and store the adjustment value.

ADJUSTMENT	ADJUSTMENT ITEM	OPERATION		VALUE
S-METER S3 LEVEL (WFM) **[1.01 MHz*]**	[S3]	1	• Set the SSG as; Frequency : (Displayed on the function display) Deviation : 52.5 kHz Level : 5 dBμ (–102 dBm)†	Push **[BAND]**. (Automatic adjustment)
[15.1 MHz*]		2	• Set the SSG as; Frequency : (Displayed on the function display) Level : 3 dBμ (–104 dBm)†	
[40.1 MHz*]		3	• Set the SSG as; Frequency : (Displayed on the function display) Level : 5 dBμ (–102 dBm)†	
[60.1 MHz*]		4	• Set the SSG as; Frequency : (Displayed on the function display) Level : 5 dBμ (–102 dBm)†	
[220.1 MHz*]		5	• Set the SSG as; Frequency : (Displayed on the function display) Level : 5 dBμ (–102 dBm)†	
[305.2 MHz*]		6	• Set the SSG as; Frequency : (Displayed on the function display) Level : 5 dBμ (–102 dBm)†	
[435.1 MHz*]		7	• Set the SSG as; Frequency : (Displayed on the function display) Level : 5 dBμ (–102 dBm)†	
[535.1 MHz*]		8	• Set the SSG as; Frequency : (Displayed on the function display) Level : 5 dBμ (–102 dBm)†	
[800.1 MHz*]		9	• Set the SSG as; Frequency : (Displayed on the function display) Level : 11 dBμ (–96 dBm)†	

†; This output level of a standard signal generator (SSG) is indicated as SSG's open circuit.
*; This frequency may differ from the actual frequency displayed on the function display.

SECTION 6 PARTS LIST

[RF UNIT]

REF NO.	PARTS NO.	DESCRIPTION	M.	H/V LOCATION
IC100	1110006870	S.IC UPC2709TB-E3	T	34/14.3
IC150	1110006380	S.IC LM2904PWR	T	43.8/34.7
IC151	1130013240	S.IC TC75S51FU(TE85L,F)	B	45.2/18
IC152	1190001830	S.IC BH2220FVM-TR	T	15.7/31.8
IC800	1130011671	S.IC MB15E03SLPFV1-G-ER-6E1	T	20.1/25.8
IC900	1110005230	S.IC UPC2757TB-E3	B	14.9/9.6
IC951	1130011760	S.IC CD4094BPWR	B	6.8/8.9
IC952	1110006380	S.IC LM2904PWR	T	8.5/28.8
Q2	1590002010	S.TRA XP1114(TX)	T	30.5/32.5
Q3	1590003281	S.TRA UNR9211G0L	T	29.7/27.3
Q4	1590003281	S.TRA UNR9211G0L	T	29.7/29.3
Q50	1590003281	S.TRA UNR9211G0L	B	33.6/36.7
Q100	1560001151	S.FET 2SK3476(TE12L,Q)	T	39/27.7
Q101	1560001161	S.FET 2SK3475(TE12L,F)	T	46.6/20.4
Q102	1530000371	S.TRA 2SC3356-T1B S (R25)	T	41.4/17.3
Q200	1530002601	S.TRA 2SC4215-O(TE85R,F)	B	12.5/36.1
Q250	1530003260	S.TRA 2SC5006-T1	B	10.4/26.6
Q251	1590002380	S.TRA XP1115(TX)	T	8.9/7.2
Q252	1590003251	S.TRA UNR9115G0L	T	3.3/8.2
Q300	1530003260	S.TRA 2SC5006-T1	T	10.4/37
Q301	1530003260	S.TRA 2SC5006-T1	T	2.9/29
Q302	1590003251	S.TRA UNR9115G0L	B	28.9/11.5
Q303	1590002380	S.TRA XP1115(TX)	T	6.9/10.1
Q304	1590003251	S.TRA UNR9115G0L	T	3.8/10.5
Q400	1580000790	S.FET 3SK318YB-TL-E	B	19.1/38.5
Q401	1530003260	S.TRA 2SC5006-T1	B	17.2/31.4
Q451	1590002380	S.TRA XP1115(TX)	B	24.7/6.1
Q500	1530003560	S.TRA 2SC5195-T1	B	29.3/23.9
Q501	1530003560	S.TRA 2SC5195-T1	B	32.2/15.7
Q600	1580000790	S.FET 3SK318YB-TL-E	B	21.9/28.2
Q601	1530003260	S.TRA 2SC5006-T1	B	21.9/16.6
Q700	1530003781	S.TRA 2SC5624VH-TL-E	B	3.4/26.5
Q701	1530003260	S.TRA 2SC5006-T1	B	10.3/13.8
Q703	1590003251	S.TRA UNR9115G0L	T	9.2/11.6
Q800	1590002380	S.TRA XP1115(TX)	B	35.2/8.8
Q801	1590003261	S.TRA UNR911NG0L	B	37.6/16.7
Q802	1560000541	S.FET 2SK880-Y(T5RICOM,F)	T	21.8/17.7
Q803	1590001650	S.TRA XP4601(TX)	B	39.2/14.4
Q850	1530003260	S.TRA 2SC5006-T1	T	13/9.1
Q1000	1550000220	S.FET TPCF8104(TE85L,F)	T	31.8/8.7
D9	1790001621	S.DIO 1SV308(TPL3,F)	B	24/43.9
D11	1750000531	S.DIO 1SV271(TPH3,F)	B	29.9/36.6
D50	1790000980	S.DIO MA742(TX)	B	30.7/43.3
D51	1750000531	S.DIO 1SV271(TPH3,F)	B	27.5/41.5
D52	1750000531	S.DIO 1SV271(TPH3,F)	B	30.5/38.4
D53	1790000980	S.DIO MA742(TX)	B	33/41.9
D54	1750000581	S.DIO 1SV307(TPH3,F)	T	30.4/38.5
D55	1750000581	S.DIO 1SV307(TPH3,F)	T	25.2/39.3
D56	1790001621	S.DIO 1SV308(TPL3,F)	B	26.2/37.3
D58	1790001621	S.DIO 1SV308(TPL3,F)	B	27.8/35.4
D59	1790000980	S.DIO MA742(TX)	B	26.9/47.2
D60	1790000980	S.DIO MA742(TX)	B	30.1/46.5
D61	1790001621	S.DIO 1SV308(TPL3,F)	T	30.9/44.9
D62	1790001621	S.DIO 1SV308(TPL3,F)	T	30.9/43.7
D100	1790001621	S.DIO 1SV308(TPL3,F)	T	30.5/14.1
D101	1750001620	S.DIO JDP2S04E(TPH3)	T	37.8/14.4
D102	1750001620	S.DIO JDP2S04E(TPH3)	T	39/14.4
D200	1790001621	S.DIO 1SV308(TPL3,F)	B	18.3/43.1
D201	1790001261	S.DIO MA2S077G0L	B	10.4/42.5
D202	1790001241	S.DIO MA2S7280GL	B	10.8/30.7
D203	1790001621	S.DIO 1SV308(TPL3,F)	B	12/30.7
D250	1790001261	S.DIO MA2S077G0L	B	9.2/42.5
D251	1790001261	S.DIO MA2S077G0L	B	7.9/27.3
D252	1750001270	S.VAR 1SV325(TPH3,F)	B	6.1/31.9
D253	1790001251	S.DIO MA2S1110GL	B	9/23
D254	1790001261	S.DIO MA2S077G0L	B	12.4/19.5
D255	1750001270	S.VAR 1SV325(TPH3,F)	B	11.4/21.3
D256	1790001621	S.DIO 1SV308(TPL3,F)	B	11.4/17.9
D300	1790001621	S.DIO 1SV308(TPL3,F)	T	19.9/40.7
D301	1790001261	S.DIO MA2S077G0L	T	20.3/36.8
D302	1790001621	S.DIO 1SV308(TPL3,F)	T	27.8/36.5
D303	1790001621	S.DIO 1SV308(TPL3,F)	T	21.1/35.6
D304	1790001261	S.DIO MA2S077G0L	T	14.9/36.5
D305	1750000721	S.VAR HVC375BTRF-E	T	13.1/36.4
D306	1790001261	S.DIO MA2S077G0L	T	4.4/38.3
D307	1750000721	S.VAR HVC375BTRF-E	T	3.6/37.1
D308	1750000721	S.VAR HVC375BTRF-E	T	3.8/33.9
D309	1790001261	S.DIO MA2S077G0L	T	3.2/31.6
D310	1790001241	S.DIO MA2S7280GL	T	4.1/26.3
D311	1790001621	S.DIO 1SV308(TPL3,F)	T	2.7/24.5
D400	1790001621	S.DIO 1SV308(TPL3,F)	B	20.5/41.6
D401	1750000771	S.VAR HVC376BTRF-E	B	16.9/33.8
D402	1750000771	S.VAR HVC376BTRF-E	B	16.9/27.1
D403	1750000771	S.VAR HVC376BTRF-E	B	15.6/23.4
D404	1790001241	S.DIO MA2S7280GL	B	15.1/27.3
D405	1790001621	S.DIO 1SV308(TPL3,F)	B	17.3/20.8
D500	1790001621	S.DIO 1SV308(TPL3,F)	B	29.7/33
D501	1790001261	S.DIO MA2S077G0L	B	28/31.7
D502	1750000721	S.VAR HVC375BTRF-E	B	28/27.2
D503	1790001251	S.DIO MA2S1110GL	B	31.9/17.4
D504	1790001261	S.DIO MA2S077G0L	B	27.7/24
D505	1750000721	S.VAR HVC375BTRF-E	B	28.5/20.6
D506	1750000721	S.VAR HVC375BTRF-E	B	29.4/17.6
D507	1790001261	S.DIO MA2S077G0L	B	28.2/15.5

[RF UNIT]

REF NO.	PARTS NO.	DESCRIPTION	M.	H/V LOCATION
D508	1790001621	S.DIO 1SV308(TPL3,F)	B	28.9/13.1
D509	1790001621	S.DIO 1SV308(TPL3,F)	B	14.6/12.1
D600	1790001621	S.DIO 1SV308(TPL3,F)	B	23.6/35.7
D601	1750000771	S.VAR HVC376BTRF-E	B	23.9/22.7
D602	1750000771	S.VAR HVC376BTRF-E	B	23/20.9
D603	1790001251	S.DIO MA2S1110GL	B	25.2/13.6
D604	1750000771	S.VAR HVC376BTRF-E	B	20/13.9
D605	1750000771	S.VAR HVC376BTRF-E	B	18.2/13.5
D606	1790001621	S.DIO 1SV308(TPL3,F)	B	14.9/14.9
D700	1790001621	S.DIO 1SV308(TPL3,F)	B	3.6/36.2
D701	1790001621	S.DIO 1SV308(TPL3,F)	B	2.4/32.4
D702	1750000721	S.VAR HVC375BTRF-E	B	3.2/28.9
D703	1750000721	S.VAR HVC375BTRF-E	B	7.6/21
D704	1750000721	S.VAR HVC375BTRF-E	B	8.4/18.1
D705	1790001251	S.DIO MA2S1110GL	B	6.2/24.8
D706	1790001621	S.DIO 1SV308(TPL3,F)	B	13/13.6
D707	1790001621	S.DIO 1SV308(TPL3,F)	B	13.1/15.2
D800	1790001251	S.DIO MA2S1110GL	T	24.6/27.7
D850	1790001621	S.DIO 1SV308(TPL3,F)	T	15.6/10.6
D851	1790001251	S.DIO MA2S1110GL	T	12.4/12.4
D1000	1790001241	S.DIO MA2S7280GL	T	37.9/7.8
D1001	1750001690	S.DIO RB050LA-40	T	40.1/8.7
L1	6200012660	S.COI 0.30-1.0-4TR 9.1N <COMO>	T	10.4/42.3
L2	6200012490	S.COI 0.30-0.9-6TR 13.6N <COMO>	T	12.7/41.7
L3	6200012490	S.COI 0.30-0.9-6TR 13.6N <COMO>	T	15.5/42.3
L4	6200012470	S.COI 0.30-1.7-7TL 45.3N <COMO>	T	25.6/41.9
L5	6200012910	S.COI 0.35-1.6-8TL 45.5N <COMO>	T	18.7/43.4
L6	6200012900	S.COI 0.30-2.0-7TL 57.2N <COMO>	T	19.6/47.1
L7	6200012460	S.COI 0.30-1.7-8TL 54N <COMO>	T	22.8/46.5
L8	6200007921	S.COI ELJRF 15NJFB	B	3.2/40.3
L9	6200007921	S.COI ELJRF 15NJFB	B	3.2/39.4
L10	6200004480	S.COI MLF1608D R82K-T	B	24.6/41.4
L12	6200004480	S.COI MLF1608D R82K-T	T	31.3/35.7
L14	6200004480	S.COI MLF1608D R82K-T	T	31.3/46.1
L15	6200010910	S.COI LQW18AN56NG00D	B	26.7/43.1
L50	6200013090	S.COI 0.26-1.1-5TR 16N <COMO>	T	28.4/39.8
L52	6200009070	S.COI LQW18AN18NG00D (LQW1608A18NG00)	B	24.4/37.5
L53	6200009070	S.COI LQW18AN18NG00D (LQW1608A18NG00)	B	25.7/35.4
L55	6200012470	S.COI 0.30-1.7-7TL 45.3N <COMO>	T	27/45.9
L100	6200013090	S.COI 0.26-1.1-5TR 16N <COMO>	T	34.1/36.9
L101	6200012850	S.COI 0.40-0.8-2TL 2.5N <COMO>	T	33.6/33.7
L103	6200013010	S.COI 0.30-0.9-5TL 10.3N <COMO>	T	35.3/39.8
L104	6200012800	S.COI 0.40-1.5-5TL 20N <COMO>	T	36.1/22.6
L105	6200008031	S.COI ELJRF 1N8DFB	T	42.6/23.9
L106	6200007961	S.COI ELJRF 6N8JFB (6.8)	T	46/24.8
L107	6200008570	S.COI LQW2BHN6N8D03L	T	41/21.5
L108	6200007921	S.COI ELJRF 15NJFB	T	48.2/17
L109	6200011650	S.COI LQW18AN68NG00D	T	43.9/17
L111	6200011031	S.COI ELJRF R10JFB	T	35.9/13.9
L200	6200006981	S.COI ELJRE R10GFA	B	15.8/43.1
L201	6200009571	S.COI ELJRE R12GFA	B	13.2/43.1
L202	6200005140	S.COI MLF1608D R33K-T	B	11.4/40.7
L203	6200005140	S.COI MLF1608D R33K-T	B	12.3/38.8
L204	6200002041	S.COI NLV25T-101J	B	11.6/33.1
L250	6200004470	S.COI MLF1608D R12K-T	B	9/30.3
L251	6200004590	S.COI MLF1608D R18K-T	B	8.6/29.1
L252	6200003960	S.COI MLF1608A 1R0K-T	B	10.1/24.8
L253	6200004600	S.COI MLF1608D R15K-T	B	11.4/22.5
L254	6200004600	S.COI MLF1608D R15K-T	B	12.7/23.7
L300	6200011001	S.COI ELJRF 56NJFB	T	18.6/39.4
L301	6200011021	S.COI ELJRF 82NJFB	T	18.6/37.8
L302	6200010991	S.COI ELJRF 47NJFB	T	26.4/36.4
L303	6200007871	S.COI ELJRF 39NJFB	T	26.4/35.5
L304	6200007881	S.COI ELJRF 33NJFB	T	18.1/36.6
L305	6200009571	S.COI ELJRE R12GFA	T	16.7/37.4
L306	6200006981	S.COI ELJRE R10GFA	T	7.8/36.7
L307	6200011001	S.COI ELJRF 56NJFB	T	8.8/37.7
L308	6200011001	S.COI ELJRF 56NJFB	T	4.2/32.8
L309	6200009101	S.COI ELJRE R18GFA	T	2.1/32.8
L310	6200011031	S.COI ELJRF R10JFB	T	2.6/27.5
L400	6200013400	S.COI LQW15ANR12J00D	B	21.9/36.4
L401	6200009250	S.COI LQW18ANR22G00D (LQW1608AR22G00)	B	17.4/36.6
L402	6200011670	S.COI LQW18AN82NG00D	B	14.8/33.8
L403	6200011670	S.COI LQW18AN82NG00D	B	17.5/29.7
L404	6200011650	S.COI LQW18AN68NG00D	B	15.6/24.6
L405	6200011660	S.COI LQW18ANR15G00D	B	22.6/38.9
L500	6200007971	S.COI ELJRF 5N6DFB	B	28.8/28.5
L501	6200007921	S.COI ELJRF 15NJFB	B	28.7/30.6
L502	6200007951	S.COI ELJRF 8N2JFB (8.2)	B	29.3/21.9
L503	6200007921	S.COI ELJRF 15NJFB	B	30.5/21.3
L504	6200007961	S.COI ELJRF 6N8JFB (6.8)	B	28.7/16.5
L505	6200007921	S.COI ELJRF 15NJFB	B	27.1/16.5
L506	6200007901	S.COI ELJRF 22NJFB	B	31.4/13.8
L508	6200011031	S.COI ELJRF R10JFB	B	28.4/32.7
L600	6200010850	S.COI LQW18AN22NG00D (LQW1608A22NG00)	B	24/31
L601	6200010910	S.COI LQW18AN56NG00D	B	21.2/30.9
L602	6200011590	S.COI LQW18AN39NG00D	B	21.2/25.4
L603	6200009220	S.COI LQW18AN15NG00D (LQW1608A15NG00)	B	23.9/23.9
L604	6200009220	S.COI LQW18AN15NG00D (LQW1608A15NG00)	B	23.1/19.7

M.=Mounted side (T: Mounted on the Top side, B: Mounted on the Bottom side)
S.=Surface mount

[RF UNIT]

REF NO.	PARTS NO.	DESCRIPTION		M.	H/V LOCATION
L605	6200009290	S.COI	LQW18AN47NG00D (LQW1608A47NG00)	B	20.2/16.9
L606	6200009220	S.COI	LQW18AN15NG00D (LQW1608A15NG00)	B	20/15.1
L607	6200009220	S.COI	LQW18AN15NG00D (LQW1608A15NG00)	B	17/13.5
L608	6200009280	S.COI	LQW18AN27NG00D (LQW1608A27NG00)	B	24.4/32.9
L610	6200005180	S.COI	MLF1608D R39K-T	B	21.2/33.5
L700	6200008001	S.COI	ELJRF 3N3DFB (3.3)	B	2.1/30.8
L701	6200011031	S.COI	ELJRF R10JFB	B	5.1/25.3
L702	6200008001	S.COI	ELJRF 3N3DFB (3.3)	B	5.6/21.6
L703	6200008001	S.COI	ELJRF 3N3DFB (3.3)	B	8.7/17.1
L704	6200007941	S.COI	ELJRF 10NJFB	B	10.3/12.2
L850	6200007941	S.COI	ELJRF 10NJFB	T	14.3/9.9
L851	6200007981	S.COI	ELJRF 4N7DFB (4.7)	T	14.3/7.4
L900	6200011031	S.COI	ELJRF R10JFB	T	22.5/4
L901	6200009351	S.COI	ELJRE R22GFA	B	16.9/9.7
R1	7030009280	S.RES	ERJ2GEJ 391 X	B	30/41.2
R3	7030004980	S.RES	ERJ2GEJ 101 X (100)	T	29.9/34.4
R4	7030005120	S.RES	ERJ2GEJ 102 X (1K)	T	28.5/33.6
R5	7030004980	S.RES	ERJ2GEJ 101 X (100)	T	31.3/47.1
R6	7030005120	S.RES	ERJ2GEJ 102 X (1K)	T	28.8/31.2
R7	7030007300	S.RES	ERJ2GEJ 332 X (3.3K)	B	28.4/33.6
R8	7030007290	S.RES	ERJ2GEJ 222 X (2.2K)	B	31/34.3
R9	7030007300	S.RES	ERJ2GEJ 332 X (3.3K)	B	22.9/43.5
R10	7030005080	S.RES	ERJ2GEJ 823 X (82K)	T	4.9/39.6
R14	7030007270	S.RES	ERJ2GEJ 151 X (150)	B	24.3/39.6
R15	7030007270	S.RES	ERJ2GEJ 151 X (150)	B	32/37
R41	7030007290	S.RES	ERJ2GEJ 222 X (2.2K)	B	18.7/44.2
R50	7030005240	S.RES	ERJ2GEJ 473 X (47K)	B	32.5/44.5
R51	7030005040	S.RES	ERJ2GEJ 472 X (4.7K)	B	35.3/43.6
R52	7030009280	S.RES	ERJ2GEJ 391 X	B	33.7/38.2
R53	7030005240	S.RES	ERJ2GEJ 473 X (47K)	B	34.9/42.4
R58	7030005240	S.RES	ERJ2GEJ 473 X (47K)	B	32.1/46.7
R59	7030005240	S.RES	ERJ2GEJ 473 X (47K)	B	32.1/45.7
R100	7030007250	S.RES	ERJ2GEJ 220 X (22)	T	45.3/30.1
R101	7030007340	S.RES	ERJ2GEJ 153 X (15K)	T	45.3/31
R102	7030004980	S.RES	ERJ2GEJ 101 X (100)	T	49.1/31.9
R103	7030004980	S.RES	ERJ2GEJ 101 X (100)	T	43/21
R104	7030009200	S.RES	ERJ2GEJ 390 X (39)	B	48.3/19.7
R105	7030005240	S.RES	ERJ2GEJ 473 X (47K)	B	48.3/22.4
R106	7030009280	S.RES	ERJ2GEJ 391 X	B	47.9/18.5
R108	7030005210	S.RES	ERJ2GEJ 822 X (8.2K)	T	40.5/14.9
R109	7030007300	S.RES	ERJ2GEJ 332 X (3.3K)	T	39.2/18.1
R111	7030005120	S.RES	ERJ2GEJ 102 X (1K)	T	40.2/13.3
R113	7030005580	S.RES	ERJ2GEJ 560 X (56)	T	43.7/15.3
R114	7030005580	S.RES	ERJ2GEJ 560 X (56)	T	44.9/15.4
R115	7030005120	S.RES	ERJ2GEJ 102 X (1K)	T	37.4/11.8
R116	7030005120	S.RES	ERJ2GEJ 102 X (1K)	T	38.3/17.4
R118	7030004980	S.RES	ERJ2GEJ 101 X (100)	T	31.1/13
R119	7030007290	S.RES	ERJ2GEJ 222 X (2.2K)	T	31.1/12.1
R120	7030010040	S.RES	ERJ2GEJ-JPW	T	36.8/15.8
R146	7030005220	S.RES	ERJ2GEJ 223 X (22K)	B	43.5/19.4
R147	7030005060	S.RES	ERJ2GEJ 333 X (33K)	B	44.7/21.1
R148	7030005230	S.RES	ERJ2GEJ 334 X (330K)	B	45.8/21.1
R149	7030005160	S.RES	ERJ2GEJ 105 X (1M)	B	47/18.5
R150	7030005050	S.RES	ERJ2GEJ 103 X (10K)	T	39.1/36
R151	7030008310	S.RES	ERJ2GEJ 564 X (560K)	T	39.5/34.7
R152	7030007300	S.RES	ERJ2GEJ 332 X (3.3K)	T	49.1/33.5
R153	7030004980	S.RES	ERJ2GEJ 101 X (100)	T	43.6/32.3
R154	7030007290	S.RES	ERJ2GEJ 222 X (2.2K)	T	37.4/12.7
R155	7030005160	S.RES	ERJ2GEJ 105 X (1M)	T	49.1/35.1
R156	7030005230	S.RES	ERJ2GEJ 334 X (330K)	T	49.1/36.7
R157	7030007340	S.RES	ERJ2GEJ 153 X (15K)	T	40.8/37
R158	7030005060	S.RES	ERJ2GEJ 333 X (33K)	T	48.2/36.7
R159	7030005220	S.RES	ERJ2GEJ 223 X (22K)	T	47/36.5
R160	7030007340	S.RES	ERJ2GEJ 153 X (15K)	T	42/37.5
R161	7510001770	S.THE	NTCG10 4LH 473JT	B	47.5/30.6
R162	7030005220	S.RES	ERJ2GEJ 223 X (22K)	B	48.7/31
R163	7030007290	S.RES	ERJ2GEJ 222 X (2.2K)	T	37.7/10.6
R200	7030007290	S.RES	ERJ2GEJ 222 X (2.2K)	B	9.2/32.8
R201	7030005240	S.RES	ERJ2GEJ 473 X (47K)	B	10.8/35.1
R202	7030005050	S.RES	ERJ2GEJ 103 X (10K)	B	10.8/36.7
R203	7030005010	S.RES	ERJ2GEJ 681 X (680)	B	14.5/37.6
R250	7030007290	S.RES	ERJ2GEJ 222 X (2.2K)	B	7.2/32.2
R251	7030005040	S.RES	ERJ2GEJ 472 X (4.7K)	B	7.5/25.7
R252	7030005240	S.RES	ERJ2GEJ 473 X (47K)	B	5/32.9
R253	7030005220	S.RES	ERJ2GEJ 223 X (22K)	B	9/27.8
R254	7030005050	S.RES	ERJ2GEJ 103 X (10K)	B	9/26.2
R255	7030007280	S.RES	ERJ2GEJ 331 X (330)	B	11.5/29.1
R256	7030005050	S.RES	ERJ2GEJ 103 X (10K)	B	12.4/17.5
R257	7030005240	S.RES	ERJ2GEJ 473 X (47K)	B	13.1/22.4
R258	7030007290	S.RES	ERJ2GEJ 222 X (2.2K)	B	10/20.1
R259	7030005050	S.RES	ERJ2GEJ 103 X (10K)	B	13.6/18.1
R300	7030007290	S.RES	ERJ2GEJ 222 X (2.2K)	T	17.9/40.7
R301	7030007290	S.RES	ERJ2GEJ 222 X (2.2K)	T	24.6/37.9
R302	7030005120	S.RES	ERJ2GEJ 102 X (1K)	T	23.4/36.7
R303	7030007290	S.RES	ERJ2GEJ 222 X (2.2K)	T	21.9/37.2
R304	7030005050	S.RES	ERJ2GEJ 103 X (10K)	T	8.5/38.9
R305	7030005240	S.RES	ERJ2GEJ 473 X (47K)	T	15.2/38.5
R306	7030005050	S.RES	ERJ2GEJ 103 X (10K)	T	9.2/35.5
R307	7030005050	S.RES	ERJ2GEJ 103 X (10K)	T	10.8/35.5
R308	7030008370	S.RES	ERJ2GEJ 561 X (560)	T	10.6/38.8
R309	7030008410	S.RES	ERJ2GEJ 392 X (3.9K)	T	6.4/38.5
R310	7030008410	S.RES	ERJ2GEJ 392 X (3.9K)	T	2.7/39.6
R311	7030005240	S.RES	ERJ2GEJ 473 X (47K)	T	5.2/36.8
R312	7030005240	S.RES	ERJ2GEJ 473 X (47K)	T	3.6/34.9
R313	7030005050	S.RES	ERJ2GEJ 103 X (10K)	T	1.5/34.2
R314	7030005220	S.RES	ERJ2GEJ 223 X (22K)	T	4.2/28
R315	7030005530	S.RES	ERJ2GEJ 100 X (10)	T	1.2/27.7
R316	7030009280	S.RES	ERJ2GEJ 391 X	T	1.2/30.7

[RF UNIT]

REF NO.	PARTS NO.	DESCRIPTION		M.	H/V LOCATION
R317	7030007290	S.RES	ERJ2GEJ 222 X (2.2K)	T	2.1/26.3
R318	7030007290	S.RES	ERJ2GEJ 222 X (2.2K)	T	15.6/39.8
R321	7030005720	S.RES	ERJ2GEJ 563 X (56K)	T	12.4/38.8
R322	7030005720	S.RES	ERJ2GEJ 563 X (56K)	T	4.4/29.2
R323	7030005050	S.RES	ERJ2GEJ 103 X (10K)	B	8.2/40
R325	7030005050	S.RES	ERJ2GEJ 103 X (10K)	B	26.3/22.8
R400	7030007300	S.RES	ERJ2GEJ 332 X (3.3K)	B	19.2/42.1
R401	7030008300	S.RES	ERJ2GEJ 184 X (180K)	B	19.2/40.3
R402	7030005110	S.RES	ERJ2GEJ 224 X (220K)	B	20.9/36.4
R403	7030005240	S.RES	ERJ2GEJ 473 X (47K)	B	19.2/41.2
R404	7030005110	S.RES	ERJ2GEJ 224 X (220K)	B	20/36.5
R405	7030005120	S.RES	ERJ2GEJ 102 X (1K)	B	16.9/35.6
R406	7030004980	S.RES	ERJ2GEJ 101 X (100)	B	18/41.2
R409	7030004990	S.RES	ERJ2GEJ 221 X (220)	B	18.3/33.9
R411	7030005240	S.RES	ERJ2GEJ 473 X (47K)	B	15.7/35.6
R414	7030007350	S.RES	ERJ2GEJ 393 X (39K)	B	15.2/29
R415	7030005040	S.RES	ERJ2GEJ 472 X (4.7K)	B	15.7/30.2
R417	7030005120	S.RES	ERJ2GEJ 102 X (1K)	B	16.9/28.2
R418	7030004990	S.RES	ERJ2GEJ 221 X (220)	B	13.5/30.9
R419	7030005090	S.RES	ERJ2GEJ 104 X (100K)	B	15.8/25.7
R420	7030005530	S.RES	ERJ2GEJ 100 X (10)	B	13.8/26.4
R421	7030005240	S.RES	ERJ2GEJ 473 X (47K)	B	16.2/21.2
R422	7030005240	S.RES	ERJ2GEJ 473 X (47K)	B	15.3/21.2
R423	7030009270	S.RES	ERJ2GEJ 821 X (820)	B	17.5/22.4
R459	7030005120	S.RES	ERJ2GEJ 102 X (1K)	T	19.8/30.5
R501	7030005050	S.RES	ERJ2GEJ 103 X (10K)	B	26.8/33.6
R502	7030005240	S.RES	ERJ2GEJ 473 X (47K)	B	27.6/26.1
R503	7030005060	S.RES	ERJ2GEJ 333 X (33K)	B	31.7/22.5
R504	7030005050	S.RES	ERJ2GEJ 103 X (10K)	B	30.8/23.4
R506	7030004990	S.RES	ERJ2GEJ 221 X (220)	B	30.3/26.3
R507	7030008410	S.RES	ERJ2GEJ 392 X (3.9K)	B	26.4/24.8
R508	7030008410	S.RES	ERJ2GEJ 392 X (3.9K)	B	27.5/21.9
R509	7030005240	S.RES	ERJ2GEJ 473 X (47K)	B	29.8/19.5
R510	7030005240	S.RES	ERJ2GEJ 473 X (47K)	B	29.2/18.6
R511	7030005050	S.RES	ERJ2GEJ 103 X (10K)	B	27.3/13.2
R512	7030005720	S.RES	ERJ2GEJ 563 X (56K)	B	30.8/15.6
R513	7030005530	S.RES	ERJ2GEJ 100 X (10)	B	32.4/12.2
R514	7030004990	S.RES	ERJ2GEJ 221 X (220)	B	34/16.4
R515	7030007290	S.RES	ERJ2GEJ 222 X (2.2K)	B	31/12.6
R516	7030005240	S.RES	ERJ2GEJ 473 X (47K)	B	15.7/11.7
R519	7030008280	S.RES	ERJ2GEJ 271 X (270)	B	32.4/13.8
R602	7030008300	S.RES	ERJ2GEJ 184 X (180K)	B	19.9/30.9
R603	7030005110	S.RES	ERJ2GEJ 224 X (220K)	B	19.9/30
R604	7030005240	S.RES	ERJ2GEJ 473 X (47K)	B	22.3/30.4
R605	7030005110	S.RES	ERJ2GEJ 224 X (220K)	B	23.9/30
R607	7030004980	S.RES	ERJ2GEJ 101 X (100)	B	19.9/27.3
R608	7030005030	S.RES	ERJ2GEJ 152 X (1.5K)	B	21.5/26.4
R610	7030004970	S.RES	ERJ2GEJ 470 X (47)	B	23.8/25.2
R612	7030005240	S.RES	ERJ2GEJ 473 X (47K)	B	20.1/23.2
R613	7030005240	S.RES	ERJ2GEJ 473 X (47K)	B	21/22.3
R616	7030005220	S.RES	ERJ2GEJ 223 X (22K)	B	23.8/14.2
R617	7030005220	S.RES	ERJ2GEJ 223 X (22K)	B	23.7/15.4
R619	7030005120	S.RES	ERJ2GEJ 102 X (1K)	B	18.3/17.1
R620	7030004990	S.RES	ERJ2GEJ 221 X (220)	B	20.5/19
R621	7030005530	S.RES	ERJ2GEJ 100 X (10)	B	17.1/17
R622	7030005240	S.RES	ERJ2GEJ 473 X (47K)	B	20.9/11.6
R623	7030005240	S.RES	ERJ2GEJ 473 X (47K)	B	19.7/10.6
R624	7030009270	S.RES	ERJ2GEJ 821 X (820)	B	16.3/16.1
R700	7030007290	S.RES	ERJ2GEJ 222 X (2.2K)	B	2.9/34.5
R701	7030007290	S.RES	ERJ2GEJ 222 X (2.2K)	B	2.5/36.6
R702	7030005120	S.RES	ERJ2GEJ 102 X (1K)	B	2.9/33.4
R703	7030008290	S.RES	ERJ2GEJ 183 X (18K)	B	5.6/26.5
R704	7030008290	S.RES	ERJ2GEJ 183 X (18K)	B	5.6/27.4
R705	7030004970	S.RES	ERJ2GEJ 470 X (47)	B	7.9/22.5
R706	7030007250	S.RES	ERJ2GEJ 220 X (22)	B	5.1/23.7
R707	7030005240	S.RES	ERJ2GEJ 473 X (47K)	B	2/29.9
R708	7030005240	S.RES	ERJ2GEJ 473 X (47K)	B	6.6/17
R709	7030005240	S.RES	ERJ2GEJ 473 X (47K)	B	5.7/17
R710	7030007250	S.RES	ERJ2GEJ 220 X (22)	B	10.3/15.3
R711	7030005220	S.RES	ERJ2GEJ 223 X (22K)	B	9.1/15.9
R712	7030007280	S.RES	ERJ2GEJ 331 X (330)	B	9.1/12.5
R713	7030004990	S.RES	ERJ2GEJ 221 X (220)	B	8.6/14.6
R714	7030007290	S.RES	ERJ2GEJ 222 X (2.2K)	B	11.9/12.1
R715	7030005240	S.RES	ERJ2GEJ 473 X (47K)	B	12.7/16.3
R800	7030005220	S.RES	ERJ2GEJ 223 X (22K)	T	23.1/21.5
R802	7030005120	S.RES	ERJ2GEJ 102 X (1K)	T	20.7/30.5
R803	7030005120	S.RES	ERJ2GEJ 102 X (1K)	T	21.6/30.5
R804	7030005120	S.RES	ERJ2GEJ 102 X (1K)	T	22.5/30.5
R805	7030005120	S.RES	ERJ2GEJ 102 X (1K)	T	24.5/24
R806	7030010040	S.RES	ERJ2GEJ-JPW	T	9.5/18.5
R807	7030009190	S.RES	RR0510P-332-D (3.3K)	T	11.2/22.9
R808	7030005990	S.RES	RR0510P-122-D (1.2K)	T	9.5/19.4
R810	7030010040	S.RES	ERJ2GEJ-JPW	T	24.1/26.1
R818	7030004980	S.RES	ERJ2GEJ 101 X (100)	T	24.6/16.3
R820	7030005050	S.RES	ERJ2GEJ 103 X (10K)	T	19.6/18.4
R821	7030005720	S.RES	ERJ2GEJ 563 X (56K)	T	22.4/16
R822	7030005080	S.RES	ERJ2GEJ 823 X (82K)	T	21.2/15.7
R824	7030005030	S.RES	ERJ2GEJ 152 X (1.5K)	B	41.5/15.6
R825	7030005050	S.RES	ERJ2GEJ 103 X (10K)	B	41.5/14.7
R826	7030000010	S.RES	MCR10EZHJ JPW (000)	T	15.1/22.7
R850	7030004970	S.RES	ERJ2GEJ 470 X (47)	T	13.7/11.1
R851	7030005070	S.RES	ERJ2GEJ 683 X (68K)	T	12.8/10.8
R852	7030007570	S.RES	ERJ2GEJ 122 X (1.2K)	T	14.5/12.3
R853	7030007290	S.RES	ERJ2GEJ 222 X (2.2K)	T	16.1/12.3
R854	7030007300	S.RES	ERJ2GEJ 332 X (3.3K)	T	15.8/7
R855	7030007290	S.RES	ERJ2GEJ 222 X (2.2K)	T	15.8/5.3
R900	7030007290	S.RES	ERJ2GEJ 222 X (2.2K)	B	13/10
R950	7030005090	S.RES	ERJ2GEJ 104 X (100K)	T	9.1/33
R951	7030005100	S.RES	ERJ2GEJ 154 X (150K)	T	7.5/33
R952	7030007270	S.RES	ERJ2GEJ 151 X (150)	T	12/31.9
R953	7030005090	S.RES	ERJ2GEJ 104 X (100K)	T	10.8/27.2
R954	7030005100	S.RES	ERJ2GEJ 154 X (150K)	T	7.4/24.5
R955	7030007270	S.RES	ERJ2GEJ 151 X (150)	T	10.8/28.8
R1001	7030005090	S.RES	ERJ2GEJ 104 X (100K)	T	32.8/6.5

M.=Mounted side (T: Mounted on the Top side, B: Mounted on the Bottom side)
S.=Surface mount

[RF UNIT]

REF NO.	PARTS NO.	DESCRIPTION		M.	H/V LOCATION
R1002	7030011870	S.RES ERJ2BSFR18X (0.18)		B	38.4/18.8
R1003	7030011870	S.RES ERJ2BSFR18X (0.18)		B	38.4/19.7
R1004	7030011870	S.RES ERJ2BSFR18X (0.18)		B	38.4/20.6
C1	4030017570	S.CER ECJ0EC1H040B		T	10.1/43.8
C2	4030017570	S.CER ECJ0EC1H040B		T	11.3/44.1
C3	4030017350	S.CER ECJ0EC1H020B		T	14.5/40.7
C4	4030017580	S.CER ECJ0EC1H060C		T	12.2/44.1
C5	4030017550	S.CER ECJ0EC1H1R5B		T	16.1/40.7
C6	4030017340	S.CER ECJ0EC1H010B		T	16.3/43.8
C7	4030017400	S.CER ECJ0EC1H220J		T	21.8/41.5
C8	4030017410	S.CER ECJ0EC1H240J		T	23.4/41.6
C9	4030017390	S.CER ECJ0EC1H180J		T	22.8/40.5
C10	4030017550	S.CER ECJ0EC1H1R5B		T	20.6/42.3
C11	4030017660	S.CER ECJ0EC1H330J		T	21.8/42.4
C12	4030017580	S.CER ECJ0EC1H060C		T	20.6/43.9
C13	4030017400	S.CER ECJ0EC1H220J		T	21.8/43.3
C14	4030017550	S.CER ECJ0EC1H1R5B		T	21.8/44.2
C17	4030017340	S.CER ECJ0EC1H010B		B	5.3/39.2
C18	4030017550	S.CER ECJ0EC1H1R5B		B	4.8/40.1
C19	4030017550	S.CER ECJ0EC1H1R5B		B	4.2/38.2
C20	4030017380	S.CER ECJ0EC1H050B		B	3.3/38.2
C23	4030016790	S.CER ECJ0EB1C103K		B	28.6/39.9
C26	4030017460	S.CER ECJ0EB1E102K		T	28.3/34.5
C27	4030017460	S.CER ECJ0EB1E102K		T	28.2/27.4
C32	4030017460	S.CER ECJ0EB1E102K		B	29.1/34.6
C34	4030017460	S.CER ECJ0EB1E102K		T	28.5/32.7
C36	4030017460	S.CER ECJ0EB1E102K		T	28.2/29.5
C37	4030017400	S.CER ECJ0EC1H220J		B	28.4/43.5
C38	4030017390	S.CER ECJ0EC1H180J		B	25/43.5
C41	4030018860	S.CER ECJ0EB0J105K		B	21.7/43.1
C43	4030017330	S.CER ECJ0EF1C104Z		T	24.7/46.1
C44	4030017460	S.CER ECJ0EB1E102K		T	29.8/35.3
C45	4030017460	S.CER ECJ0EB1E102K		T	30.1/47.4
C46	4030016790	S.CER ECJ0EB1C103K		B	26.4/40.1
C47	4030017460	S.CER ECJ0EB1E102K		B	25.2/39.6
C48	4030017460	S.CER ECJ0EB1E102K		B	31.7/33.2
C49	4030017460	S.CER ECJ0EB1E102K		B	21.8/44.5
C50	4030017340	S.CER ECJ0EC1H010B		T	28.7/42.1
C51	4030017460	S.CER ECJ0EB1E102K		B	33.7/43.6
C52	4030017600	S.CER ECJ0EC1H080C		T	27.5/42.1
C54	4030017590	S.CER ECJ0EC1H070C		T	30.3/41
C55	4030017440	S.CER ECJ0EC1H221J		B	31/35.2
C56	4030017460	S.CER ECJ0EB1E102K		B	34/35.3
C57	4030017460	S.CER ECJ0EB1E102K		B	30.4/40
C58	4030017440	S.CER ECJ0EC1H221J		B	33.7/39.1
C59	4030017340	S.CER ECJ0EC1H010B		T	31.4/40.5
C62	4030017380	S.CER ECJ0EC1H050B		B	26.4/39.2
C63	4030017600	S.CER ECJ0EC1H080C		B	25.8/38.3
C65	4030017570	S.CER ECJ0EC1H040B		B	26.7/35.4
C66	4030017340	S.CER ECJ0EC1H010B		T	25.9/47.8
C67	4030017620	S.CER ECJ0EC1H100C		T	24.7/44.5
C68	4030017640	S.CER ECJ0EC1H150J		T	28.3/43.7
C69	4030017340	S.CER ECJ0EC1H010B		T	28.3/47.8
C70	4030017460	S.CER ECJ0EB1E102K		B	27.4/45.1
C71	4030017460	S.CER ECJ0EB1E102K		B	28.3/45.1
C72	4030017330	S.CER ECJ0EF1C104Z		T	29.2/44.9
C100	4030017430	S.CER ECJ0EC1H101J		T	32.3/37.7
C101	4030017610	S.CER ECJ0EC1H090C	[EUR]	T	33.8/35.2
	4030017610	S.CER ECJ0EC1H090C	[UK]		
	4030017610	S.CER ECJ0EC1H090C	[ITR]		
	4030017620	S.CER ECJ0EC1H100C	[USA]		
	4030017610	S.CER ECJ0EC1H090C	[FRA]		
	4030017610	S.CER ECJ0EC1H090C	[SEA]		
	4030017610	S.CER ECJ0EC1H090C	[CHN]		
	4030017610	S.CER ECJ0EC1H090C	[KOR]		
	4030017610	S.CER ECJ0EC1H090C	[AUS]		
	4030017610	S.CER ECJ0EC1H090C	[EXP]		
C102	4030011530	S.CER C1608 CH 1H 110J-T		T	35.9/34
C103	4030007030	S.CER C1608 CH 1H 150J-T		T	35.9/35.2
C104	4030007080	S.CER C1608 CH 1H 390J-T		T	37.4/32.8
C106	4030011540	S.CER C1608 CH 1H 750J-T		T	33.6/41.2
C108	4030017460	S.CER ECJ0EB1E102K		T	32.5/42.9
C109	4550007650	S.TAN F931V105MAABMA		T	33.7/23.1
C111	4030017460	S.CER ECJ0EB1E102K		T	32.3/20.1
C112	4030017500	S.CER ECJ0EC1H560J		T	44.1/24.9
C114	4030017680	S.CER ECJ0EC1H820J		T	48.1/24.8
C117	4030017460	S.CER ECJ0EB1E102K		T	41/19.7
C119	4030017460	S.CER ECJ0EB1E102K		T	48.2/30.2
C121	4030017460	S.CER ECJ0EB1E102K		T	45.8/17
C122	4030017460	S.CER ECJ0EB1E102K		T	41.4/14.9
C123	4030017330	S.CER ECJ0EF1C104Z		T	42.3/14.9
C124	4030017460	S.CER ECJ0EB1E102K		T	39.2/16.5
C125	4030017430	S.CER ECJ0EC1H101J		T	35.9/15.5
C126	4030017460	S.CER ECJ0EB1E102K		T	34.3/12.5
C127	4030016930	S.CER ECJ0EB1A104K		B	48.3/21.5
C128	4030017460	S.CER ECJ0EB1E102K		B	48.3/20.6
C129	4030017430	S.CER ECJ0EC1H101J		T	32.2/14
C131	4030017460	S.CER ECJ0EB1E102K		T	38/23.2
C132	4030017460	S.CER ECJ0EB1E102K		T	44.7/37.1
C133	4030017460	S.CER ECJ0EB1E102K		T	29.9/12.7
C135	4030017340	S.CER ECJ0EC1H010B		T	29/12.9
C136	4030017330	S.CER ECJ0EF1C104Z		T	41.9/19.7
C137	4030017460	S.CER ECJ0EB1E102K		T	47/16.5
C138	4030017460	S.CER ECJ0EB1E102K		T	38/16.2
C142	4030017330	S.CER ECJ0EF1C104Z		T	39.2/19.7
C143	4030017330	S.CER ECJ0EF1C104Z		T	40.1/19.7
C144	4030017620	S.CER ECJ0EC1H100C		T	48.2/15.6
C145	4030017460	S.CER ECJ0EB1E102K		T	38.1/19
C146	4030016790	S.CER ECJ0EB1C103K		T	12/31
C147	4030016790	S.CER ECJ0EB1C103K		T	12/32.8
C148	4030016790	S.CER ECJ0EB1C103K		T	13/29
C149	4030016790	S.CER ECJ0EB1C103K		T	12/30.1

[RF UNIT]

REF NO.	PARTS NO.	DESCRIPTION	M.	H/V LOCATION
C150	4030016790	S.CER ECJ0EB1C103K	T	38.6/34.7
C151	4030016930	S.CER ECJ0EB1A104K	T	40.8/37.9
C152	4030016790	S.CER ECJ0EB1C103K	T	40.4/32.3
C156	4030017460	S.CER ECJ0EB1E102K	T	32.3/12.4
C157	4030017460	S.CER ECJ0EB1E102K	T	46.9/31.1
C158	4030019460	S.CER C1608 JB 0J 106M-T	T	47.3/32.1
C159	4030016790	S.CER ECJ0EB1C103K	T	45.2/32.3
C160	4030016930	S.CER ECJ0EB1A104K	T	36.5/10.9
C161	4030016790	S.CER ECJ0EB1C103K	B	44.5/16.2
C166	4030019460	S.CER C1608 JB 0J 106M-T	B	48.4/23.4
C172	4030017460	S.CER ECJ0EB1E102K	B	35.2/41.2
C181	4030017460	S.CER ECJ0EB1E102K	B	48.7/30.1
C201	4030017630	S.CER ECJ0EC1H120J	B	14.4/42
C202	4030017500	S.CER ECJ0EC1H560J	B	14.7/40.8
C203	4030017580	S.CER ECJ0EC1H060C	B	11.5/43.5
C204	4030017660	S.CER ECJ0EC1H330J	B	13.2/41.7
C205	4030017500	S.CER ECJ0EC1H560J	B	11.9/41.7
C206	4030017400	S.CER ECJ0EC1H220J	B	10.9/39.6
C207	4030017710	S.CER ECJ0EC1H181J	B	13.5/40.4
C208	4030017600	S.CER ECJ0EC1H080C	B	11.2/38.4
C209	4030017430	S.CER ECJ0EC1H101J	B	13.3/38.5
C210	4030018860	S.CER ECJ0EB0J105K	B	10.3/38.3
C211	4030016930	S.CER ECJ0EB1A104K	B	14.5/35.8
C212	4030016930	S.CER ECJ0EB1A104K	B	14.5/38.5
C250	4030017400	S.CER ECJ0EC1H220J	B	8.1/31.7
C251	4030016790	S.CER ECJ0EB1C103K	B	6.8/27
C252	4030017460	S.CER ECJ0EB1E102K	B	5/31.2
C253	4030017640	S.CER ECJ0EC1H150J	B	10.3/28.7
C254	4030016790	S.CER ECJ0EB1C103K	B	11.5/28.2
C255	4030016790	S.CER ECJ0EB1C103K	B	12.2/26.6
C256	4030016930	S.CER ECJ0EB1A104K	B	12.2/25.7
C257	4030017620	S.CER ECJ0EC1H100C	B	10.6/23.7
C258	4030016790	S.CER ECJ0EB1C103K	B	13.7/19.2
C259	4030017460	S.CER ECJ0EB1E102K	B	13.4/21.2
C260	4030017400	S.CER ECJ0EC1H220J	B	10.9/20
C261	4030017420	S.CER ECJ0EC1H470J	B	13.6/17.2
C262	4030017460	S.CER ECJ0EB1E102K	T	6.6/6.6
C263	4030017420	S.CER ECJ0EC1H470J	B	12.9/24.8
C264	4030017460	S.CER ECJ0EB1E102K	T	9.6/9
C300	4030017460	S.CER ECJ0EB1E102K	T	16.8/39.5
C301	4030017390	S.CER ECJ0EC1H180J	T	19.9/39.7
C302	4030017640	S.CER ECJ0EC1H150J	T	17.7/39.4
C303	4030017670	S.CER ECJ0EC1H390J	T	19.9/38.8
C304	4030017380	S.CER ECJ0EC1H050B	T	17.7/37.8
C305	4030017400	S.CER ECJ0EC1H220J	T	19.9/37.9
C306	4030017650	S.CER ECJ0EC1H270J	T	26.4/37.3
C307	4030017420	S.CER ECJ0EC1H470J	T	25.2/36.7
C308	4030017630	S.CER ECJ0EC1H120J	T	24.3/36.7
C309	4030017690	S.CER ECJ0EC1H121J	T	24.8/35.5
C310	4030017400	S.CER ECJ0EC1H220J	T	23.2/35.5
C311	4030017460	S.CER ECJ0EB1E102K	T	22.8/39.2
C312	4030017620	S.CER ECJ0EC1H100C	T	19/35.7
C313	4030016790	S.CER ECJ0EB1C103K	T	13.4/38.5
C314	4030017430	S.CER ECJ0EC1H101J	T	14.3/38.5
C315	4030017630	S.CER ECJ0EC1H120J	T	12/36
C316	4030016790	S.CER ECJ0EB1C103K	T	11.5/38.8
C317	4030017460	S.CER ECJ0EB1E102K	T	6.4/37.6
C318	4030016790	S.CER ECJ0EB1C103K	T	9.7/38.8
C319	4030016790	S.CER ECJ0EB1C103K	T	3.6/39.6
C320	4030017430	S.CER ECJ0EC1H101J	T	6.4/36.7
C321	4030017550	S.CER ECJ0EC1H1R5B	T	6.4/35.8
C322	4030017460	S.CER ECJ0EB1E102K	T	2.3/35.5
C323	4030017460	S.CER ECJ0EB1E102K	T	3.5/36
C324	4030017460	S.CER ECJ0EB1E102K	T	1.1/31.6
C325	4030017360	S.CER ECJ0EC1H030B	T	3.9/30.6
C326	4030017460	S.CER ECJ0EB1E102K	T	1.2/28.9
C327	4030016790	S.CER ECJ0EB1C103K	T	1.2/29.8
C328	4030017730	S.CER ECJ0EB1E471K	T	3/26.3
C329	4030017460	S.CER ECJ0EB1E102K	T	5.3/12.1
C330	4030017460	S.CER ECJ0EB1E102K	B	28.9/9.7
C331	4030017460	S.CER ECJ0EB1E102K	T	6.1/7.8
C332	4030017460	S.CER ECJ0EB1E102K	B	3.9/5.5
C337	4030017460	S.CER ECJ0EB1E102K	B	7.3/40
C339	4030017440	S.CER ECJ0EC1H221J	B	27/12
C340	4030017460	S.CER ECJ0EB1E102K	T	21.6/38.6
C341	4030017460	S.CER ECJ0EB1E102K	T	3.6/12.1
C343	4030017460	S.CER ECJ0EB1E102K	T	5/7.2
C400	4030017440	S.CER ECJ0EC1H221J	B	20.9/38.8
C401	4030017370	S.CER ECJ0EC1H3R5B	B	21.4/37.6
C402	4030018860	S.CER ECJ0EB0J105K	B	16.9/38.9
C403	4030017460	S.CER ECJ0EB1E102K	B	19.1/36.5
C404	4030016790	S.CER ECJ0EB1C103K	B	16.8/40.7
C405	4030017460	S.CER ECJ0EB1E102K	B	16.8/39.8
C407	4030017600	S.CER ECJ0EC1H080C	B	18.1/35.1
C408	4030017550	S.CER ECJ0EC1H1R5B	B	18.3/33
C409	4030017430	S.CER ECJ0EC1H101J	B	14.5/34.9
C410	4030017460	S.CER ECJ0EB1E102K	B	15.7/38.4
C411	4030017380	S.CER ECJ0EC1H050B	B	15.8/32.5
C412	4030018860	S.CER ECJ0EB0J105K	B	14/32.1
C414	4030016790	S.CER ECJ0EB1C103K	B	13.5/29.1
C415	4030017460	S.CER ECJ0EB1E102K	B	13.5/30
C417	4030017460	S.CER ECJ0EB1E102K	B	18.1/28.4
C418	4030017460	S.CER ECJ0EB1E102K	B	13.6/28.2
C419	4030017430	S.CER ECJ0EC1H101J	B	13.6/27.3
C420	4030017530	S.CER ECJ0EC1H0R5B	B	17.3/25.8
C421	4030017660	S.CER ECJ0EC1H330J	B	15.9/22.4
C422	4030017430	S.CER ECJ0EC1H101J	B	14.3/22.4
C423	4030017580	S.CER ECJ0EC1H060C	B	17.3/24.2
C424	4030017460	S.CER ECJ0EB1E102K	B	16.2/19.6
C425	4030017460	S.CER ECJ0EB1E102K	B	18.3/21.2
C426	4030017460	S.CER ECJ0EB1E102K	B	21.1/40
C427	4030017460	S.CER ECJ0EB1E102K	B	22.7/40
C457	4030017460	S.CER ECJ0EB1E102K	T	23.5/29
C462	4030017420	S.CER ECJ0EC1H470J	T	23.5/27.4

M.=Mounted side (T: Mounted on the Top side, B: Mounted on the Bottom side)
S.=Surface mount

[RF UNIT]

REF NO.	PARTS NO.	DESCRIPTION	M.	H/V LOCATION
C463	4030016930	S.CER ECJ0EB1A104K	T	24.1/25.2
C467	4030017420	S.CER ECJ0EC1H470J	B	24.6/10.6
C469	4030017420	S.CER ECJ0EC1H470J	B	25.5/10.6
C470	4030017420	S.CER ECJ0EC1H470J	B	26.9/5.3
C471	4030017420	S.CER ECJ0EC1H470J	B	26.7/9
C472	4030017460	S.CER ECJ0EB1E102K	T	23.4/24
C500	4030017380	S.CER ECJ0EC1H050B	B	29.7/28.5
C501	4030017460	S.CER ECJ0EB1E102K	B	26/31.8
C502	4030017610	S.CER ECJ0EC1H090C	B	26/27.2
C503	4030017460	S.CER ECJ0EB1E102K	B	26/26.1
C504	4030017590	S.CER ECJ0EC1H070C	B	28.8/25.8
C505	4030017460	S.CER ECJ0EB1E102K	B	30.3/25.4
C506	4030017460	S.CER ECJ0EB1E102K	B	32.1/21.3
C507	4030017460	S.CER ECJ0EB1E102K	B	28.4/21.9
C508	4030017460	S.CER ECJ0EB1E102K	B	26.4/23.9
C509	4030017390	S.CER ECJ0EC1H180J	B	30.5/20.4
C510	4030017550	S.CER ECJ0EC1H1R5B	B	31/18.9
C511	4030017400	S.CER ECJ0EC1H220J	B	27.4/17.4
C512	4030017440	S.CER ECJ0EC1H221J	B	32/19.7
C513	4030017460	S.CER ECJ0EB1E102K	B	27/14.4
C514	4030017630	S.CER ECJ0EC1H120J	B	29.9/16.1
C515	4030017460	S.CER ECJ0EB1E102K	B	33.6/13.5
C516	4030017460	S.CER ECJ0EB1E102K	B	34/15.5
C517	4030017620	S.CER ECJ0EC1H100C	B	30.2/14.2
C523	4030017460	S.CER ECJ0EB1E102K	B	26.8/32.7
C524	4030017460	S.CER ECJ0EB1E102K	T	30.1/21.9
C600	4030017380	S.CER ECJ0EC1H050B	B	22.7/33.7
C601	4030017650	S.CER ECJ0EC1H270J	B	23.4/32.4
C602	4030017630	S.CER ECJ0EC1H120J	B	22.3/32.5
C603	4030018860	S.CER ECJ0EB0J105K	B	19.9/26.4
C604	4030017460	S.CER ECJ0EB1E102K	B	23.9/29.1
C608	4030017350	S.CER ECJ0EC1H020B	B	22.9/25.5
C609	4030017350	S.CER ECJ0EC1H020B	B	24.7/25.2
C610	4030017390	S.CER ECJ0EC1H180J	B	21.3/23.5
C611	4030017340	S.CER ECJ0EC1H010B	B	24.7/21.4
C613	4030017640	S.CER ECJ0EC1H150J	B	21/20.8
C614	4030017460	S.CER ECJ0EB1E102K	B	19.4/22.3
C615	4030017350	S.CER ECJ0EC1H020B	B	23.9/17.1
C616	4030018860	S.CER ECJ0EB0J105K	B	22.6/14.6
C618	4030016790	S.CER ECJ0EB1C103K	B	21.4/18.3
C619	4030017460	S.CER ECJ0EB1E102K	B	22.3/18.3
C620	4030017460	S.CER ECJ0EB1E102K	B	23.2/18.3
C621	4030017350	S.CER ECJ0EC1H020B	B	19.2/16.4
C622	4030017640	S.CER ECJ0EC1H150J	B	21.3/12.8
C623	4030017340	S.CER ECJ0EC1H010B	B	17.9/15.2
C625	4030017640	S.CER ECJ0EC1H150J	B	17.8/11.8
C626	4030017460	S.CER ECJ0EB1E102K	B	21.8/10.8
C627	4030017350	S.CER ECJ0EC1H020B	B	16.3/15.2
C630	4030017630	S.CER ECJ0EC1H120J	B	22.7/34.6
C631	4030017390	S.CER ECJ0EC1H180J	B	24.3/34.6
C633	4030016790	S.CER ECJ0EB1C103K	B	23.9/28.2
C634	4030017460	S.CER ECJ0EB1E102K	B	23.9/27.3
C674	4030017460	S.CER ECJ0EB1E102K	B	19.9/32.7
C701	4030017580	S.CER ECJ0EC1H060C	B	3.5/31.1
C702	4030017380	S.CER ECJ0EC1H050B	B	4.1/33.6
C703	4030017460	S.CER ECJ0EB1E102K	B	1.7/35
C704	4030017660	S.CER ECJ0EC1H330J	B	1.1/29
C705	4030017380	S.CER ECJ0EC1H050B	B	1.6/27.6
C706	4030017460	S.CER ECJ0EB1E102K	B	3.6/29.9
C707	4030017460	S.CER ECJ0EB1E102K	B	1.6/26
C708	4030017680	S.CER ECJ0EC1H820J	B	5.6/22.5
C709	4030017460	S.CER ECJ0EB1E102K	B	6.8/22.5
C710	4030017660	S.CER ECJ0EC1H330J	B	4.5/17.5
C711	4030017550	S.CER ECJ0EC1H1R5B	B	8.6/19.6
C713	4030017400	S.CER ECJ0EC1H220J	B	7.5/16.7
C714	4030017460	S.CER ECJ0EB1E102K	B	4.5/16.6
C715	4030017640	S.CER ECJ0EC1H150J	B	10.2/16.7
C716	4030017460	S.CER ECJ0EB1E102K	B	8.6/13.7
C717	4030017460	S.CER ECJ0EB1E102K	B	8/12.5
C718	4030017620	S.CER ECJ0EC1H100C	B	11.8/13.6
C724	4030017460	S.CER ECJ0EB1E102K	T	11/10.8
C725	4030017730	S.CER ECJ0EB1E471K	B	1.3/33.8
C802	4030017460	S.CER ECJ0EB1E102K	B	32.9/8.1
C803	4030017460	S.CER ECJ0EB1E102K	B	32.9/9
C804	4030017460	S.CER ECJ0EB1E102K	B	37/8.8
C806	4030017460	S.CER ECJ0EB1E102K	B	35.6/16.7
C813	4030017730	S.CER ECJ0EB1E471K	T	19.8/20
C819	4030017460	S.CER ECJ0EB1E102K	T	21.5/19.5
C820	4550006910	S.TAN TEESVP 1C 334M8R	T	9.5/21.8
C821	4550007760	S.TAN TEESVP 1A 335M8R	T	7.7/21.8
C822	4340000260	S.MYL ECPU1C104MA5	T	11.8/21.5
C826	4030017420	S.CER ECJ0EC1H470J	B	15.6/17.8
C827	4030018860	S.CER ECJ0EB0J105K	B	38.5/12.4
C830	4030017440	S.CER ECJ0EC1H221J	T	24.4/17.5
C831	4030017460	S.CER ECJ0EB1E102K	T	20.3/15.7
C832	4550007940	S.TAN TCP0J226M8R	B	41.3/17.6
C833	4030018860	S.CER ECJ0EB0J105K	B	41.5/12.9
C834	4030017460	S.CER ECJ0EB1E102K	B	41.4/13.8
C835	4550007940	S.TAN TCP0J226M8R	B	36.2/14.6
C836	4030017460	S.CER ECJ0EB1E102K	B	39.6/16.2
C837	4030017460	S.CER ECJ0EB1E102K	T	19.6/17.5
C838	4030017730	S.CER ECJ0EB1E471K	B	15.3/19.6
C839	4030017440	S.CER ECJ0EC1H221J	B	18.4/19.3
C840	4030017420	S.CER ECJ0EC1H470J	B	33.1/19.6
C841	4030017730	S.CER ECJ0EB1E471K	T	21.5/21.6
C842	4030017730	S.CER ECJ0EB1E471K	T	16.7/28.7
C843	4030017730	S.CER ECJ0EB1E471K	T	16.7/29.6
C850	4030017460	S.CER ECJ0EB1E102K	T	10.7/12
C851	4030017460	S.CER ECJ0EB1E102K	T	12.7/7.6
C852	4030017380	S.CER ECJ0EC1H050B	T	14.6/11.1
C853	4030017350	S.CER ECJ0EC1H020B	T	14.9/8.6
C854	4030017460	S.CER ECJ0EB1E102K	T	15.8/8.6
C856	4030017360	S.CER ECJ0EC1H030B	B	13.4/7.7
C857	4030017350	S.CER ECJ0EC1H020B	T	14.3/6.5

[RF UNIT]

REF NO.	PARTS NO.	DESCRIPTION	M.	H/V LOCATION
C858	4030016790	S.CER ECJ0EB1C103K	T	14.8/25.3
C859	4030018890	S.CER ECJ0EB0J224K	T	14.8/27.1
C860	4030017460	S.CER ECJ0EB1E102K	T	14.8/26.2
C862	4030018890	S.CER ECJ0EB0J224K	T	16.8/25.3
C900	4030016930	S.CER ECJ0EB1A104K	B	13.6/11.6
C901	4030017460	S.CER ECJ0EB1E102K	B	15.6/7.9
C906	4030017440	S.CER ECJ0EC1H221J	B	22.4/6.1
C907	4030017440	S.CER ECJ0EC1H221J	B	23.1/13.3
C908	4030017730	S.CER ECJ0EB1E471K	T	20.9/4
C909	4030017650	S.CER ECJ0EC1H270J	B	18/9.5
C910	4030017420	S.CER ECJ0EC1H470J	B	25.4/11.9
C911	4030017420	S.CER ECJ0EC1H470J	B	23.1/11.9
C914	4030017730	S.CER ECJ0EB1E471K	T	23.1/20.4
C919	4030017460	S.CER ECJ0EB1E102K	T	17.7/5.2
C920	4030017460	S.CER ECJ0EB1E102K	T	26.5/12.3
C921	4030017460	S.CER ECJ0EB1E102K	B	17.9/7.9
C951	4030017460	S.CER ECJ0EB1E102K	B	2.1/11.2
C952	4030017460	S.CER ECJ0EB1E102K	T	10.4/25.4
C1000	4030017460	S.CER ECJ0EB1E102K	B	41.2/9
C1002	4030017460	S.CER ECJ0EB1E102K	B	38.1/7
C1004	4030017460	S.CER ECJ0EB1E102K	T	24.2/2.8
C1005	4030017460	S.CER ECJ0EB1E102K	T	31.1/5.5
C1006	4030017460	S.CER ECJ0EB1E102K	T	36.5/7
C1007	4510009990	S.ELE EEEHA1C100R	T	44.7/12.2
C1008	4030017460	S.CER ECJ0EB1E102K	T	34.3/8.1
J800	6510025371	S.CON AXK816145WG	T	15.9/18
J1000	6450000870	CON HEC2711-01-020		
J1001	6510022861	S.CON AXK6S30447YG	T	21.9/9.1
W1	9021295001	WIR 23/00/030/W01/W01		
EP100	6910019100	S.BEA MPZ1608S101AT	T	34.4/20
EP102	6910018460	S.BEA MMZ1005Y102C-T	T	30.9/30.7
EP103	6910018460	S.BEA MMZ1005Y102C-T	T	36.8/13.9
EP105	6910012350	S.BEA MMZ1608Y 102BT	T	38.2/21.1
EP150	6910018460	S.BEA MMZ1005Y102C-T	T	42/32.3
EP151	6910018460	S.BEA MMZ1005Y102C-T	B	43.2/17.1
EP152	6910018460	S.BEA MMZ1005Y102C-T	T	13.9/29.2
EP801	6910018460	S.BEA MMZ1005Y102C-T	T	21.5/20.4
EP802	6910018460	S.BEA MMZ1005Y102C-T	T	15.1/28.3
EP900	6910018460	S.BEA MMZ1005Y102C-T	B	15.7/7
EP1000	6910014730	S.BEA MPZ2012S331A-T	B	46.5/10.4
EP1001	6910019100	S.BEA MPZ1608S101AT	B	40.1/7.4
EP1002	6910019100	S.BEA MPZ1608S101AT	T	29/6
MP1	8510019530	PLA 3155 ANT PLATE Y1158		
MP100	8410002610	S.HEA 2888 PA HEATSINK Y835	B	39/27.7
MP101	8510017610	S.PLA OG-542925	B	4/13.9
MP200	8510017610	S.PLA OG-542925	B	46.6/14
MP201	6910014760	S.PLA OG-503040	B	20.8/46.7

M.=Mounted side (T: Mounted on the Top side, B: Mounted on the Bottom side)
S.=Surface mount

[MAIN UNIT]

REF NO.	PARTS NO.	DESCRIPTION		M.	H/V LOCATION
IC100	1110003201	S.IC	TA31136FNG(EL)	B	47.3/27.4
IC150	1110006380	S.IC	LM2904PWR	B	18.3/29.3
IC500	1130011770	S.IC	CD4066BPWR	B	18.4/40.5
IC501	1110003800	S.IC	NJM2904V-TE1-#FMZB	B	18.3/20.3
IC600	1190002930	S.IC	BU2502MUV-E2	T	22.2/16.8
IC701	1130011760	S.IC	CD4094BPWR	B	12.5/9
IC702	1130011760	S.IC	CD4094BPWR	T	12.5/9.1
IC800	1110006380	S.IC	LM2904PWR	B	34/15.9
IC1000	1130009981	S.IC	TC7W53FK(TE85L,F)	T	28.6/30.9
Q1	1530002601	S.TRA	2SC4215-O(TE85R,F)	T	27/21.6
Q2	1530002601	S.TRA	2SC4215-O(TE85R,F)	T	31/27.4
Q100	1530002601	S.TRA	2SC4215-O(TE85R,F)	B	47.2/37.9
Q101	1590003291	S.TRA	UNR9213G0L	T	40.4/33.4
Q102	1590002010	S.TRA	XP1114(TX)	T	42.7/34.2
Q103	1590001190	S.TRA	XP6501-(TX).AB	B	31.8/34.1
Q104	1590001190	S.TRA	XP6501-(TX).AB	B	25.5/38.9
Q105	1590003251	S.TRA	UNR9115G0L	T	24.7/38.4
Q150	1590003251	S.TRA	UNR9115G0L	T	20.3/38.9
Q152	1590003291	S.TRA	UNR9213G0L	B	44/33.6
Q153	1590003251	S.TRA	UNR9115G0L	B	39.9/13.9
Q154	1590003431	S.TRA	UNR911HG0L	B	23/20.9
Q159	1590003291	S.TRA	UNR9213G0L	T	42.4/27.7
Q200	1590003291	S.TRA	UNR9213G0L	T	33.9/43.4
Q201	1590002010	S.TRA	XP1114(TX)	T	36.5/42.8
Q450	1530002601	S.TRA	2SC4215-O(TE85R,F)	B	35.4/8.2
Q451	1530002601	S.TRA	2SC4215-O(TE85R,F)	B	41.7/9.2
Q452	1530003630	S.TRA	2SC4617 TLS	B	45.7/7.1
Q500	1590003281	S.TRA	UNR9211G0L	B	13/15.9
Q552	1530004000	S.TRA	2SC4738-GR(TE85L,F)	T	18.6/32.3
Q700	1550000160	S.FET	CPH3313-TL-E	T	4.8/43.1
Q701	1590003291	S.TRA	UNR9213G0L	T	4.6/39.4
Q800	1510001100	S.TRA	2SA1832-GR(TE85R,F)	B	32.3/8.2
Q801	1590003291	S.TRA	UNR9213G0L	B	30.9/13.1
Q803	1590003281	S.TRA	UNR9211G0L	T	30.7/16.7
Q804	1520000460	S.TRA	2SB1132 T100 R	T	31.8/9.4
Q805	1590001170	S.TRA	XP1501-(TX).AB	T	33.8/15
D2	1750001070	S.DIO	DAN235ETL	B	25.8/20.1
D3	1750001070	S.DIO	DAN235ETL	B	37.8/35.9
D4	1790000980	S.DIO	MA742(TX)	B	35.6/36.8
D10	1750001210	S.DIO	HSB88ASTR-E	T	29.3/23.4
D100	1790001241	S.DIO	MA2S7280GL	T	30.3/35.3
D102	1790001251	S.DIO	MA2S1110GL	B	48.8/15.7
D103	1790001251	S.DIO	MA2S1110GL	B	48.8/19.1
D104	1790001241	S.DIO	MA2S7280GL	B	26.4/35.3
D105	1790001251	S.DIO	MA2S1110GL	B	47.6/15.7
D106	1790001251	S.DIO	MA2S1110GL	B	47.6/19.1
D150	1790001251	S.DIO	MA2S1110GL	B	42.2/15.6
D151	1790001251	S.DIO	MA2S1110GL	B	42.2/19
D450	1750001070	S.DIO	DAN235ETL	B	48/13.3
D700	1790001241	S.DIO	MA2S7280GL	T	8.1/43.6
D800	1730002261	S.ZEN	MAZ8030GHL	B	35.6/25.3
FI2	2020001800	S.CER	SFECV13M3DA0001-R0 (SFECV13.35M)	B	37.1/32.5
FI50	2030000720	S.MON	FL-429 MFT61.6M 61.650 MHz	B	27.6/27.6
FI100	2020002490	CER	LTM450EW <JJE>		
FI200	2020002570	CER	LTM450HW <JJE>		
X100	6070000300	S.DIS	JTBM450CX24 <JJE>	T	47.5/35.8
X450	6050012830	S.XTA	CR-875 TTS14VSB-A4 15.3 MHz	T	46.4/8.3
L1	6200005140	S.COI	MLF1608D R33K-T	T	27.3/24.5
L10	6200010381	S.COI	ELJRE R15JFA	B	27.2/17
L30	6200009181	S.COI	ELJRE R10JFA	B	28.4/17
L100	6200007170	S.COI	MLF1608A 3R3K-T	B	48.7/35.1
L101	6200003131	S.COI	NLV32T-120J	T	41.8/37
L450	6200005190	S.COI	MLF1608D R56K-T	B	43.7/8.2
L451	6200005190	S.COI	MLF1608D R56K-T	B	45.2/10.8
L452	6200003540	S.COI	MLF1608D R22K-T	B	47.4/6.2
L453	6200003630	S.COI	MLF1608D R68K-T	B	48.5/9.8
L454	6200003630	S.COI	MLF1608D R68K-T	B	47.4/8.1
R6	7030007290	S.RES	ERJ2GEJ 222 X (2.2K)	B	26.6/22
R7	7030007290	S.RES	ERJ2GEJ 222 X (2.2K)	B	28.7/20.8
R8	7030004990	S.RES	ERJ2GEJ 221 X (220)	B	29/22.2
R9	7030004990	S.RES	ERJ2GEJ 221 X (220)	B	27.5/32.5
R10	7030007290	S.RES	ERJ2GEJ 222 X (2.2K)	B	29.3/33.4
R11	7030007290	S.RES	ERJ2GEJ 222 X (2.2K)	B	38.7/37.2
R14	7030009200	S.RES	ERJ2GEJ 390 X (39)	B	29.5/19.2
R15	7030005170	S.RES	ERJ2GEJ 474 X (470K)	T	28.7/20.5
R16	7030004980	S.RES	ERJ2GEJ 101 X (100)	T	27.8/26.3
R17	7030005170	S.RES	ERJ2GEJ 474 X (470K) [EUR]	T	28.3/27.5
	7030005170	S.RES	ERJ2GEJ 474 X (470K) [UK]		
	7030005170	S.RES	ERJ2GEJ 474 X (470K) [ITR]		
	7030005090	S.RES	ERJ2GEJ 104 X (100K) [USA]		
	7030005170	S.RES	ERJ2GEJ 474 X (470K) [FRA]		
	7030005170	S.RES	ERJ2GEJ 474 X (470K) [SEA]		
	7030005170	S.RES	ERJ2GEJ 474 X (470K) [CHN]		
	7030005170	S.RES	ERJ2GEJ 474 X (470K) [KOR]		
	7030005170	S.RES	ERJ2GEJ 474 X (470K) [AUS]		
	7030005170	S.RES	ERJ2GEJ 474 X (470K) [EXP]		
R18	7030007280	S.RES	ERJ2GEJ 331 X (330) [EUR]	T	27.4/27.5
	7030007280	S.RES	ERJ2GEJ 331 X (330) [UK]		
	7030007280	S.RES	ERJ2GEJ 331 X (330) [ITR]		
	7030007570	S.RES	ERJ2GEJ 122 X (1.2K) [USA]		
	7030007280	S.RES	ERJ2GEJ 331 X (330) [FRA]		

[MAIN UNIT]

REF NO.	PARTS NO.	DESCRIPTION		M.	H/V LOCATION
R18	7030007280	S.RES	ERJ2GEJ 331 X (330) [SEA]	T	27.4/27.5
	7030007280	S.RES	ERJ2GEJ 331 X (330) [CHN]		
	7030007280	S.RES	ERJ2GEJ 331 X (330) [KOR]		
	7030007280	S.RES	ERJ2GEJ 331 X (330) [AUS]		
	7030007280	S.RES	ERJ2GEJ 331 X (330) [EXP]		
R19	7030007290	S.RES	ERJ2GEJ 222 X (2.2K)	B	36.5/40.4
R23	7030010040	S.RES	ERJ2GEJ-JPW	B	34.5/29.4
R24	7030007280	S.RES	ERJ2GEJ 331 X (330)	B	38.7/29.8
R25	7030005290	S.RES	ERJ2GEJ 682 X (6.8K) [EUR]	T	31.5/25.5
	7030005290	S.RES	ERJ2GEJ 682 X (6.8K) [UK]		
	7030005290	S.RES	ERJ2GEJ 682 X (6.8K) [ITR]		
	7030005050	S.RES	ERJ2GEJ 103 X (10K) [USA]		
	7030005290	S.RES	ERJ2GEJ 682 X (6.8K) [FRA]		
	7030005290	S.RES	ERJ2GEJ 682 X (6.8K) [SEA]		
	7030005290	S.RES	ERJ2GEJ 682 X (6.8K) [CHN]		
	7030005290	S.RES	ERJ2GEJ 682 X (6.8K) [KOR]		
	7030005290	S.RES	ERJ2GEJ 682 X (6.8K) [AUS]		
	7030005290	S.RES	ERJ2GEJ 682 X (6.8K) [EXP]		
R55	7030005120	S.RES	ERJ2GEJ 102 X (1K)	B	27.7/5.4
R100	7030008290	S.RES	ERJ2GEJ 183 X (18K)	B	46.8/33.9
R101	7030008410	S.RES	ERJ2GEJ 392 X (3.9K)	B	46.3/35.2
R102	7030004990	S.RES	ERJ2GEJ 221 X (220)	B	44.9/38.1
R104	7030004990	S.RES	ERJ2GEJ 221 X (220)	B	45.4/36
R105	7030007570	S.RES	ERJ2GEJ 122 X (1.2K)	T	42.6/39.3
R106	7030007570	S.RES	ERJ2GEJ 122 X (1.2K)	T	51.3/34.8
R107	7030005240	S.RES	ERJ2GEJ 473 X (47K)	B	48.7/32.7
R108	7030005030	S.RES	ERJ2GEJ 152 X (1.5K)	B	48.3/23.1
R109	7030005720	S.RES	ERJ2GEJ 563 X (56K)	T	45.7/28.3
R110	7030007340	S.RES	ERJ2GEJ 153 X (15K)	T	44.1/27.4
R111	7030005100	S.RES	ERJ2GEJ 154 X (150K)	T	45.7/26.5
R112	7030005120	S.RES	ERJ2GEJ 102 X (1K)	T	44.1/26.5
R113	7030005310	S.RES	ERJ2GEJ 124 X (120K)	T	45/24.1
R114	7030008010	S.RES	ERJ2GEJ 123 X (12K)	T	48.2/23.2
R115	7030005050	S.RES	ERJ2GEJ 103 X (10K)	B	50.1/17.4
R116	7030005050	S.RES	ERJ2GEJ 103 X (10K)	B	50.1/18.3
R117	7030009290	S.RES	ERJ2GEJ 562 X (5.6K)	B	48.4/17.4
R119	7030008010	S.RES	ERJ2GEJ 123 X (12K)	B	47.7/20.7
R120	7030005030	S.RES	ERJ2GEJ 152 X (1.5K)	B	28.4/36
R121	7030005120	S.RES	ERJ2GEJ 102 X (1K)	B	28.4/36.9
R122	7030005240	S.RES	ERJ2GEJ 473 X (47K)	B	32.2/36
R123	7030005100	S.RES	ERJ2GEJ 154 X (150K)	B	29.9/34.7
R124	7030005170	S.RES	ERJ2GEJ 474 X (470K)	B	26.1/36.3
R125	7030005600	S.RES	ERJ2GEJ 273 X (27K)	B	23.9/42.3
R126	7030005060	S.RES	ERJ2GEJ 333 X (33K)	B	22.2/42.3
R127	7030005040	S.RES	ERJ2GEJ 472 X (4.7K)	B	22.2/40.4
R129	7030004980	S.RES	ERJ2GEJ 101 X (100)	T	26.2/37.8
R130	7030007340	S.RES	ERJ2GEJ 153 X (15K)	B	29/34.6
R133	7030007350	S.RES	ERJ2GEJ 393 X (39K)	B	18.4/44.8
R150	7030005050	S.RES	ERJ2GEJ 103 X (10K)	B	20.7/35.9
R151	7030005090	S.RES	ERJ2GEJ 104 X (100K)	B	21.9/36.6
R152	7030005080	S.RES	ERJ2GEJ 823 X (82K)	B	19.5/35.8
R153	7030005080	S.RES	ERJ2GEJ 823 X (82K)	B	19.1/34.6
R154	7030005080	S.RES	ERJ2GEJ 823 X (82K)	B	17.8/34.1
R155	7030005230	S.RES	ERJ2GEJ 334 X (330K)	B	15.5/27.3
R156	7030005100	S.RES	ERJ2GEJ 154 X (150K)	B	14/31.6
R157	7030005070	S.RES	ERJ2GEJ 683 X (68K)	B	14.9/31.6
R158	7030005240	S.RES	ERJ2GEJ 473 X (47K)	B	14.8/30.4
R159	7030005160	S.RES	ERJ2GEJ 105 X (1M)	B	13.7/29.2
R161	7030005090	S.RES	ERJ2GEJ 104 X (100K)	B	12.5/28.7
R162	7030005050	S.RES	ERJ2GEJ 103 X (10K)	B	41/17.9
R163	7030005050	S.RES	ERJ2GEJ 103 X (10K)	B	41/16.6
R164	7030005060	S.RES	ERJ2GEJ 333 X (33K)	T	43.4/29.2
R165	7030005030	S.RES	ERJ2GEJ 152 X (1.5K)	B	45.4/34.3
R166	7030005050	S.RES	ERJ2GEJ 103 X (10K)	T	51.3/23.7
R190	7030005090	S.RES	ERJ2GEJ 104 X (100K)	T	23.9/37.1
R210	7030007290	S.RES	ERJ2GEJ 222 X (2.2K)	B	17.4/15.2
R217	7030005050	S.RES	ERJ2GEJ 103 X (10K)	T	18.9/23.1
R218	7030009140	S.RES	ERJ2GEJ 272 X (2.7K)	B	12.9/44.8
R219	7030005120	S.RES	ERJ2GEJ 102 X (1K)	B	13.4/43.6
R260	7030005090	S.RES	ERJ2GEJ 104 X (100K)	B	22.1/38.7
R450	7030007060	S.RES	ERJ2GEJ 684X (680K)	T	50/8.3
R451	7030007340	S.RES	ERJ2GEJ 153 X (15K)	T	44/11.7
R452	7030008300	S.RES	ERJ2GEJ 184 X (180K)	T	46.1/11.3
R453	7030005090	S.RES	ERJ2GEJ 104 X (100K)	T	49.4/11.3
R455	7030004980	S.RES	ERJ2GEJ 101 X (100)	B	37.6/8.4
R456	7030005070	S.RES	ERJ2GEJ 683 X (68K)	B	38.1/7.2
R457	7030005080	S.RES	ERJ2GEJ 823 X (82K)	B	36.1/5.9
R458	7030005120	S.RES	ERJ2GEJ 102 X (1K)	B	35.2/5.9
R459	7030005000	S.RES	ERJ2GEJ 471 X (470) [EUR]	B	42.5/6.6
	7030005000	S.RES	ERJ2GEJ 471 X (470) [UK]		
	7030005000	S.RES	ERJ2GEJ 471 X (470) [ITR]		
	7030007290	S.RES	ERJ2GEJ 222 X (2.2K) [USA]		
	7030005000	S.RES	ERJ2GEJ 471 X (470) [FRA]		
	7030005000	S.RES	ERJ2GEJ 471 X (470) [SEA]		
	7030005000	S.RES	ERJ2GEJ 471 X (470) [CHN]		
	7030005000	S.RES	ERJ2GEJ 471 X (470) [KOR]		
	7030005000	S.RES	ERJ2GEJ 471 X (470) [AUS]		
	7030005000	S.RES	ERJ2GEJ 471 X (470) [EXP]		
R460	7030005090	S.RES	ERJ2GEJ 104 X (100K)	B	41.3/7.5
R470	7030008280	S.RES	ERJ2GEJ 271 X (270)	B	48.5/5.1
R471	7030008300	S.RES	ERJ2GEJ 184 X (180K)	B	45.3/5.5
R473	7030005050	S.RES	ERJ2GEJ 103 X (10K)	B	45.7/12.7
R474	7030005040	S.RES	ERJ2GEJ 472 X (4.7K)	B	45.7/14.2
R475	7030005050	S.RES	ERJ2GEJ 103 X (10K)	B	49.2/11.3
R500	7030005090	S.RES	ERJ2GEJ 104 X (100K)	B	12.1/19.4
R501	7030005120	S.RES	ERJ2GEJ 102 X (1K)	B	12.5/20.7
R502	7030008010	S.RES	ERJ2GEJ 123 X (12K)	B	12.2/22
R503	7030007340	S.RES	ERJ2GEJ 153 X (15K)	B	15/23.8
R504	7030007060	S.RES	ERJ2GEJ 684X (680K)	B	18.2/24.6
R505	7030005110	S.RES	ERJ2GEJ 224 X (220K)	B	14.6/20.8
R506	7030005090	S.RES	ERJ2GEJ 104 X (100K)	B	14.6/19
R507	7030005220	S.RES	ERJ2GEJ 223 X (22K)	B	15.5/17.8
R508	7030005220	S.RES	ERJ2GEJ 223 X (22K)	B	15.5/16.2
R509	7030005220	S.RES	ERJ2GEJ 223 X (22K)	B	15.9/14.9

M.=Mounted side (T: Mounted on the Top side, B: Mounted on the Bottom side)
S.=Surface mount

[MAIN UNIT]

REF NO.	PARTS NO.	DESCRIPTION	M.	H/V LOCATION
R559	7030007290	S.RES ERJ2GEJ 222 X (2.2K)	T	19.5/29.5
R560	7030005100	S.RES ERJ2GEJ 154 X (150K)	T	21.4/35.2
R561	7030005240	S.RES ERJ2GEJ 473 X (47K)	T	20.1/35.7
R562	7030005160	S.RES ERJ2GEJ 105 X (1M)	T	18.8/33.9
R564	7030005170	S.RES ERJ2GEJ 474 X (470K)	T	20.1/31.9
R565	7030008280	S.RES ERJ2GEJ 271 X (270)	T	17.2/32.5
R603	7030005220	S.RES ERJ2GEJ 223 X (22K)	T	14.4/16.5
R604	7030005050	S.RES ERJ2GEJ 103 X (10K)	T	16.8/15.6
R605	7030005120	S.RES ERJ2GEJ 102 X (1K)	T	21.8/12.3
R606	7030009270	S.RES ERJ2GEJ 821 X (820)	T	21.2/11.1
R607	7030010040	S.RES ERJ2GEJ-JPW	T	25.7/12.7
R700	7030005120	S.RES ERJ2GEJ 102 X (1K)	B	5.2/30.5
R701	7030005000	S.RES ERJ2GEJ 471 X (470)	T	7/43.1
R702	7030005090	S.RES ERJ2GEJ 104 X (100K)	T	5.6/40.9
R703	7030005000	S.RES ERJ2GEJ 471 X (470)	T	4/40.9
R704	7030005050	S.RES ERJ2GEJ 103 X (10K)	T	3.1/38.5
R705	7030005240	S.RES ERJ2GEJ 473 X (47K)	B	9/12.5
R706	7030005240	S.RES ERJ2GEJ 473 X (47K)	T	4.7/37.8
R800	7030005050	S.RES ERJ2GEJ 103 X (10K)	B	32.3/6.7
R801	7030005050	S.RES ERJ2GEJ 103 X (10K)	B	32.3/9.8
R802	7030005050	S.RES ERJ2GEJ 103 X (10K)	B	32.9/21.5
R803	7030012250	S.RES ERJ2RKD 1004X (1M)	B	33.2/20.3
R804	7030012260	S.RES ERJ2RKD 4703X (470K)	B	34.8/23
R805	7030012270	S.RES ERJ2RKD 1203X (120K)	B	31.3/11.6
R806	7030012270	S.RES ERJ2RKD 1203X (120K)	B	31.3/10.7
R807	7030012250	S.RES ERJ2RKD 1004X (1M)	B	34.8/21.2
R808	7030012260	S.RES ERJ2RKD 4703X (470K)	B	34.8/22.1
R811	7030005040	S.RES ERJ2GEJ 472 X (4.7K)	T	32.7/13.2
R812	7030005050	S.RES ERJ2GEJ 103 X (10K)	T	34.4/12.3
R813	7030005000	S.RES ERJ2GEJ 471 X (470)	T	32.5/16.8
R814	7030005050	S.RES ERJ2GEJ 103 X (10K)	T	33.2/18
R815	7030005160	S.RES ERJ2GEJ 105 X (1M)	T	34.4/19.4
R1004	7030010010	S.RES ERJ2RKF 334 X (330K)	T	24.9/30.3
R1005	7030007610	S.RES RR0510P-683-D (68K)	T	27.3/33.1
R1006	7030010010	S.RES ERJ2RKF 334 X (330K)	T	24/31.3
R1007	7030007610	S.RES RR0510P-683-D (68K)	T	25.8/32.5
C3	4030016790	S.CER ECJ0EB1C103K	B	25.1/18.4
C4	4030016790	S.CER ECJ0EB1C103K	B	27.8/21.7
C5	4030017580	S.CER ECJ0EC1H060C	B	27.8/22.6
C6	4030017400	S.CER ECJ0EC1H220J	B	30.9/29.4
C7	4030017590	S.CER ECJ0EC1H070C	B	25.8/32.5
C8	4030016790	S.CER ECJ0EB1C103K	B	29.3/32.5
C9	4030016790	S.CER ECJ0EB1C103K	B	39.9/36.6
C10	4030017620	S.CER ECJ0EC1H100C	B	28.6/19.2
C12	4030016790	S.CER ECJ0EB1C103K	T	26.2/24
C13	4030017430	S.CER ECJ0EC1H101J	T	30.3/25.1
C14	4030017460	S.CER ECJ0EB1E102K	T	32.4/24.6
C15	4030016790	S.CER ECJ0EB1C103K	T	29.2/27.5
C16	4030016930	S.CER ECJ0EB1A104K	B	34.1/28.2
C17	4030016930	S.CER ECJ0EB1A104K	B	39.9/35.7
C18	4030017380	S.CER ECJ0EC1H050B	B	27.4/18.7
C19	4030017510	S.CER ECJ0EC1H680J	B	29.5/16.7
C20	4030017510	S.CER ECJ0EC1H680J	B	26.2/16.7
C24	4030017780	S.CER ECJ0EB1E472K	B	27.5/33.9
C25	4030017780	S.CER ECJ0EB1E472K	B	36.5/42.6
C26	4030017780	S.CER ECJ0EB1E472K	B	30.4/19.2
C29	4030017780	S.CER ECJ0EB1E472K	B	29.9/22.2
C30	4030016790	S.CER ECJ0EB1C103K	B	26.2/18.3
C31	4030017460	S.CER ECJ0EB1E102K	B	37.3/37.7
C61	4030017620	S.CER ECJ0EC1H100C	B	27.7/6.3
C102	4030016790	S.CER ECJ0EB1C103K	B	44.9/39
C104	4030017460	S.CER ECJ0EB1E102K	B	47.2/39.9
C105	4030016790	S.CER ECJ0EB1C103K	B	49.6/33.7
C106	4030017460	S.CER ECJ0EB1E102K	T	38.8/33.4
C108	4030017510	S.CER ECJ0EC1H680J	T	41.7/39.3
C109	4030018140	S.CER ECJ0EB1H391K	T	43.5/39.3
C110	4030019460	S.CER C1608 JB 0J 106M-T	T	43.6/31.4
C111	4030017680	S.CER ECJ0EC1H820J	T	45.7/30.8
C112	4030017430	S.CER ECJ0EC1H101J	T	47.8/30.4
C113	4030016790	S.CER ECJ0EB1C103K	T	49.3/27.6
C114	4030019460	S.CER C1608 JB 0J 106M-T	T	47.8/26.8
C115	4030016930	S.CER ECJ0EB1A104K	B	50.9/26.8
C116	4030016930	S.CER ECJ0EB1A104K	T	50.2/27.6
C117	4030017040	S.CER ECJ0EB1A333K	T	46.9/30.4
C118	4030017460	S.CER ECJ0EB1E102K	T	44.1/28.3
C119	4030017460	S.CER ECJ0EB1E102K	T	45.7/29.2
C120	4030017460	S.CER ECJ0EB1E102K	T	45.7/27.4
C121	4030017730	S.CER ECJ0EB1E471K	T	44.6/25.3
C122	4030017730	S.CER ECJ0EB1E471K	T	45.5/25.3
C123	4030016930	S.CER ECJ0EB1A104K	T	48.5/24.5
C124	4030016930	S.CER ECJ0EB1A104K	B	47.6/21.9
C125	4030016930	S.CER ECJ0EB1A104K	B	50.9/27.7
C126	4030017430	S.CER ECJ0EC1H101J	B	48.6/21.9
C127	4030018900	S.CER ECJ0EB0J474K	B	28.4/38.1
C128	4030016790	S.CER ECJ0EB1C103K	B	30.4/36
C130	4550007940	S.TAN TCP0J226M8R	B	23.5/43.8
C131	4030016930	S.CER ECJ0EB1A104K	T	23.3/38.7
C133	4030017460	S.CER ECJ0EB1E102K	B	23.9/41.4
C134	4030016790	S.CER ECJ0EB1C103K	B	22.2/41.3
C136	4030016930	S.CER ECJ0EB1A104K	B	50.1/16.5
C137	4030016930	S.CER ECJ0EB1A104K	B	50.1/19.2
C142	4030017430	S.CER ECJ0EC1H101J	B	30.5/31.9
C143	4030018860	S.CER ECJ0EB0J105K	B	21.1/44.3
C144	4030016930	S.CER ECJ0EB1A104K	B	45.4/32.7
C150	4030017770	S.CER ECJ0EB1E332K	B	23.1/36.2
C151	4030017720	S.CER ECJ0EB1H331K	B	22.1/37.8
C152	4030016940	S.CER ECJ0EB1A393K	B	20.4/34.2
C153	4030017910	S.CER ECJ0EB1H152K	B	19.1/33.7
C154	4030016930	S.CER ECJ0EB1A104K	B	16.8/34.1
C155	4030018860	S.CER ECJ0EB0J105K	B	12.5/30.6
C156	4030016930	S.CER ECJ0EB1A104K	B	15.2/26.1
C157	4030016930	S.CER ECJ0EB1A104K	B	12.5/29.6

[MAIN UNIT]

REF NO.	PARTS NO.	DESCRIPTION	M.	H/V LOCATION
C158	4030017430	S.CER ECJ0EC1H101J	B	14.6/29.2
C161	4030017460	S.CER ECJ0EB1E102K	T	42.3/26.1
C170	4030017460	S.CER ECJ0EB1E102K	B	38/14.5
C171	4030016930	S.CER ECJ0EB1A104K	B	41.4/14.2
C172	4030016930	S.CER ECJ0EB1A104K	B	41.4/20.4
C173	4030017460	S.CER ECJ0EB1E102K	B	50.1/15.3
C182	4030016790	S.CER ECJ0EB1C103K	B	28.4/39
C192	4030017460	S.CER ECJ0EB1E102K	B	38/12.7
C193	4030017460	S.CER ECJ0EB1E102K	B	21.6/21.4
C194	4030017460	S.CER ECJ0EB1E102K	T	22.5/37.1
C405	4030016790	S.CER ECJ0EB1C103K	B	39/7.2
C450	4030016930	S.CER ECJ0EB1A104K	T	46.3/5
C451	4030017460	S.CER ECJ0EB1E102K	T	42.7/6.8
C452	4030019460	S.CER C1608 JB 0J 106M-T	T	41.9/11.6
C453	4030017460	S.CER ECJ0EB1E102K	T	45.2/11.3
C454	4030017460	S.CER ECJ0EB1E102K	T	50.6/11.8
C455	4030016790	S.CER ECJ0EB1C103K	B	37.1/7.2
C456	4030016790	S.CER ECJ0EB1C103K	B	34.3/5.9
C457	4030017460	S.CER ECJ0EB1E102K	B	43.4/5.3
C458	4030016790	S.CER ECJ0EB1C103K	B	40.7/11
C459	4030017430	S.CER ECJ0EC1H101J	B	39.9/8.1
C460	4030017390	S.CER ECJ0EC1H180J	B	45/9.7
C461	4030017360	S.CER ECJ0EC1H030B	B	43.5/10.3
C462	4030017630	S.CER ECJ0EC1H120J	B	45.7/11.8
C463	4030017570	S.CER ECJ0EC1H040B	B	42.3/11
C464	4030017460	S.CER ECJ0EB1E102K	B	48.5/6.7
C465	4030016790	S.CER ECJ0EB1C103K	B	45.3/8.6
C466	4030017460	S.CER ECJ0EB1E102K	B	41.3/6.6
C468	4030017570	S.CER ECJ0EC1H040B	B	46.8/9.5
C470	4030017380	S.CER ECJ0EC1H050B	B	46.9/11.3
C471	4030017710	S.CER ECJ0EC1H181J	B	49.1/8.4
C472	4030016790	S.CER ECJ0EB1C103K	B	47.8/11.3
C473	4030016790	S.CER ECJ0EB1C103K	B	46.6/14.2
C500	4030016930	S.CER ECJ0EB1A104K	B	15.6/37.1
C504	4030016930	S.CER ECJ0EB1A104K	B	13.4/21.6
C505	4030016790	S.CER ECJ0EB1C103K	B	14.6/22.6
C506	4030017770	S.CER ECJ0EB1E332K	B	15.8/22.2
C507	4030018090	S.CER ECJ0EB1C822K	B	16.6/24.6
C508	4030016930	S.CER ECJ0EB1A104K	B	14.6/19.9
C509	4030016930	S.CER ECJ0EB1A104K	B	19.8/24.8
C510	4030016790	S.CER ECJ0EB1C103K	B	14.6/16.2
C512	4030017790	S.CER ECJ0EB1E682K	B	15.9/14
C513	4030017910	S.CER ECJ0EB1H152K	B	16.4/16.2
C514	4030016930	S.CER ECJ0EB1A104K	B	18.3/14.9
C558	4030016930	S.CER ECJ0EB1A104K	T	18/30.7
C559	4030017460	S.CER ECJ0EB1E102K	T	20.1/34.8
C560	4030018390	S.CER ECJ0EB1A563K	T	21/33.6
C561	4030017330	S.CER ECJ0EF1C104Z	T	20.1/33.6
C562	4030016930	S.CER ECJ0EB1A104K	T	18.9/26
C600	4030017460	S.CER ECJ0EB1E102K	T	26.7/18.3
C601	4030019460	S.CER C1608 JB 0J 106M-T	T	24.1/24.3
C602	4030017460	S.CER ECJ0EB1E102K	T	22.4/11.1
C605	4030018860	S.CER ECJ0EB0J105K	T	14.4/15.6
C608	4030017460	S.CER ECJ0EB1E102K	T	7/5.5
C610	4550006970	S.TAN TEESVA0G476M8R	T	18.2/12.9
C701	4030017460	S.CER ECJ0EB1E102K	B	9.9/12.5
C702	4030017460	S.CER ECJ0EB1E102K	B	8.1/11.7
C703	4030017460	S.CER ECJ0EB1E102K	T	7.9/5.5
C704	4030017460	S.CER ECJ0EB1E102K	B	4.8/13.2
C705	4030017460	S.CER ECJ0EB1E102K	B	4.8/29.2
C706	4030017460	S.CER ECJ0EB1E102K	B	4.3/30.5
C707	4030017420	S.CER ECJ0EC1H470J	B	27.7/45.7
C708	4030017420	S.CER ECJ0EC1H470J	B	28.6/45.7
C710	4030017420	S.CER ECJ0EC1H470J	B	19.9/46.6
C712	4030017460	S.CER ECJ0EB1E102K	T	9.2/43.6
C713	4030017460	S.CER ECJ0EB1E102K	T	8.8/40.5
C714	4030017420	S.CER ECJ0EC1H470J	T	6.9/40.5
C715	4030017460	S.CER ECJ0EB1E102K	T	7.9/40.5
C719	4030017460	S.CER ECJ0EB1E102K	B	25.7/45.4
C720	4030017420	S.CER ECJ0EC1H470J	B	40.5/43.3
C721	4030017420	S.CER ECJ0EC1H470J	B	44.5/43.3
C724	4030017420	S.CER ECJ0EC1H470J	B	31.3/37.8
C730	4030017460	S.CER ECJ0EB1E102K	B	24/15.3
C731	4030017460	S.CER ECJ0EB1E102K	B	24.9/15.3
C732	4030017460	S.CER ECJ0EB1E102K	B	29.2/9.8
C733	4030017460	S.CER ECJ0EB1E102K	B	20.1/4.3
C734	4030017460	S.CER ECJ0EB1E102K	T	24.8/5.4
C735	4030017460	S.CER ECJ0EB1E102K	B	23.1/14.2
C752	4030017460	S.CER ECJ0EB1E102K	T	16/35.4
C754	4030017460	S.CER ECJ0EB1E102K	T	14.4/33.4
C755	4030017460	S.CER ECJ0EB1E102K	T	14.4/32.4
C756	4030017460	S.CER ECJ0EB1E102K	T	14.4/31.4
C758	4030017460	S.CER ECJ0EB1E102K	T	16.5/28.8
C759	4030017460	S.CER ECJ0EB1E102K	T	14.4/27.9
C760	4030017460	S.CER ECJ0EB1E102K	T	14.4/27
C761	4030017460	S.CER ECJ0EB1E102K	T	15.6/26.1
C763	4030017460	S.CER ECJ0EB1E102K	T	15.4/24.6
C765	4030017460	S.CER ECJ0EB1E102K	T	15.4/22.2
C766	4030017460	S.CER ECJ0EB1E102K	T	14.4/20.3
C767	4030017460	S.CER ECJ0EB1E102K	T	14.4/19.4
C768	4030017460	S.CER ECJ0EB1E102K	T	14.4/18.4
C777	4030017460	S.CER ECJ0EB1E102K	T	7.1/29.9
C779	4030017460	S.CER ECJ0EB1E102K	T	7.1/28.9
C780	4030017460	S.CER ECJ0EB1E102K	T	7.1/27.9
C781	4030017460	S.CER ECJ0EB1E102K	T	5.4/24.3
C789	4030017460	S.CER ECJ0EB1E102K	T	7.1/18.5
C790	4030017460	S.CER ECJ0EB1E102K	B	6.4/30.8
C792	4030017400	S.CER ECJ0EC1H220J	T	28.4/25
C800	4030017460	S.CER ECJ0EB1E102K	B	34.8/23.9
C801	4030017460	S.CER ECJ0EB1E102K	B	34.8/20.3
C802	4030017460	S.CER ECJ0EB1E102K	B	33.5/11.6
C803	4030017460	S.CER ECJ0EB1E102K	B	29.4/13
C804	4030017460	S.CER ECJ0EB1E102K	B	31.8/4.8
C805	4030018910	S.CER C1608 JB 0J 475K-T	T	30.8/5.4

M.=Mounted side (T: Mounted on the Top side, B: Mounted on the Bottom side)
S.=Surface mount

[MAIN UNIT]

REF NO.	PARTS NO.	DESCRIPTION		M.	H/V LOCATION
C808	4030017460	S.CER	ECJ0EB1E102K	T	30.7/18.4
C810	4550006250	S.TAN	TEESVA 1A 106M8R	T	27/7.1
C812	4030017460	S.CER	ECJ0EB1E102K	T	34.4/13.2
C813	4030017460	S.CER	ECJ0EB1E102K	T	34.4/17.6
C814	4030017460	S.CER	ECJ0EB1E102K	T	34.4/18.5
C815	4030017460	S.CER	ECJ0EB1E102K	T	32.8/5.4
C816	4030017430	S.CER	ECJ0EC1H101J		
C1010	4030017460	S.CER	ECJ0EB1E102K	T	29.7/33.6
J700	6510025880	CON	TC38-108-01 <CFE>		
J701	6450000131	CON	HSJ1102-018540		
J702	6510022472	S.CON	40FLT-SM2-TB(LF)(SN)(M)	T	10.7/26.6
J703	6510022881	S.CON	AXK5S30347YG	B	23.1/9.4
S700	2260002840	SWI	SKHLLFA010		
S701	2260002840	SWI	SKHLLFA010		
EP100	6910018460	S.BEA	MMZ1005Y102C-T	T	49.8/26.4
EP450	6910018460	S.BEA	MMZ1005Y102C-T	T	48.5/5.3
EP500	6910018460	S.BEA	MMZ1005Y102C-T	B	43.7/6.5
EP701	6910018460	S.BEA	MMZ1005Y102C-T	B	29.5/45.3
EP702	6910014680	S.BEA	MMZ1608Y 121BT	B	26/46.5
EP704	6910018460	S.BEA	MMZ1005Y102C-T	B	17.6/46.3
EP705	6910018460	S.BEA	MMZ1005Y102C-T	B	19.9/47.5
EP706	6910018460	S.BEA	MMZ1005Y102C-T	T	6.4/44.6
EP707	6910014680	S.BEA	MMZ1608Y 121BT	B	27.2/44.3
EP750	6910018460	S.BEA	MMZ1005Y102C-T	T	13.7/35.4
EP751	6910018460	S.BEA	MMZ1005Y102C-T	T	14.1/29.7
EP752	6910018460	S.BEA	MMZ1005Y102C-T	T	14.1/28.8
EP755	6910018460	S.BEA	MMZ1005Y102C-T	T	15.7/33.6
EP756	6910018460	S.BEA	MMZ1005Y102C-T	T	8.1/33.8
EP757	6910018460	S.BEA	MMZ1005Y102C-T	T	6.6/31.4
EP758	6910018460	S.BEA	MMZ1005Y102C-T	T	7.5/31.4
EP759	6910018460	S.BEA	MMZ1005Y102C-T	T	8.2/25.8
EP760	6910018460	S.BEA	MMZ1005Y102C-T	T	7.1/23.7

[LOGIC UNIT]

REF NO.	PARTS NO.	DESCRIPTION		M.	H/V LOCATION
IC1	1140015090	S.IC	HD64F2364VTE34V	T	20.6/29.2
IC3	1130014260	S.IC	SN74LVC2GU04DCKR	T	20.7/12.1
IC51	1140012950	S.IC	24LC512T-I/SM	B	13.3/45.5
IC52	1120003020	S.IC	MAX3221IPWR	T	16.6/42.8
IC100	1110007430	S.IC	S-812C33AUA-C2N-T2 G	B	24.7/21.7
IC101	1110007440	S.IC	S-80929CNMC-G8Z-T2 G	T	13/11.9
IC102	1190002120	S.IC	XC9201D09AKR	B	87.2/44
IC103	1180002590	S.REG	XC6204B332MR	T	54.8/43.4
IC104	1110006520	S.IC	LMV331IDCKR	B	86.8/21.1
IC125	1110006930	S.IC	XC6371A551PR	T	37/33.6
IC300	1110005310	S.IC	AN6123MS	B	34.8/35.4
IC301	1130009981	S.IC	TC7W53FK(TE85L,F)	B	36.4/41.4
IC302	1110006470	S.IC	LMV324IPWR	B	37.2/26.1
IC303	1130009981	S.IC	TC7W53FK(TE85L,F)	B	29.9/27
IC400	1110001811	S.IC	TA7368FG(5,ER)	B	52.7/19.6
IC500	1130013440	S.IC	SN74LVC2G74DCTR	B	62.9/15.8
IC501	1110005430	S.IC	CMX589AD5/TR	B	45.8/39.5
IC502	1130007021	S.IC	TC7S66FU(TE85L,F)	B	41.7/33.3
IC503	1130011631	S.IC	AD73311ARSZ	B	68.4/40.9
IC504	1110005290	S.IC	NJM2115V-TE1-#ZZZB	B	52.5/47.3
IC505	1130011930	S.IC	SN74LVC1G04DCKR	B	79.8/19.1
IC506	1130010920	S.IC	AMBE-2020	B	70.2/27.5
IC507	1110006090	S.IC	XC6202P502PR	T	65.2/42.2
IC508	1180002590	S.REG	XC6204B332MR	T	65.5/32.9
IC603	1130014930	S.IC	LC75827W-E	B	17.2/32
Q50	1530004000	S.TRA	2SC4738-GR(TE85L,F)	T	17.7/9.7
Q51	1540000661	S.TRA	2SD2216GSL	T	25.1/12.9
Q52	1540000661	S.TRA	2SD2216GSL	T	27.1/43.6
Q53	1510001100	S.TRA	2SA1832-GR(TE85R,F)	T	22.3/15.9
Q101	1550000090	S.FET	RSQ035P03TR	B	85.3/48.3
Q102	1590003231	S.TRA	UNR9113G0L	B	88.4/25.1
Q103	1590003291	S.TRA	UNR9213G0L	B	90.5/25.1
Q150	1510000671	S.TRA	2SA1588-GR(TE85R, F)	B	83.6/6.5
Q151	1520000651	S.TRA	2SB1201S-TL-E	B	87.7/11.9
Q152	1590003291	S.TRA	UNR9213G0L	T	47.7/21.1
Q153	1590001170	S.TRA	XP1501-(TX).AB	T	43.4/22
Q200	1590003291	S.TRA	UNR9213G0L	T	37.8/10.9
Q201	1590003291	S.TRA	UNR9213G0L	T	35.8/10.9
Q202	1590003431	S.TRA	UNR911HG0L	T	52.6/50
Q203	1510001100	S.TRA	2SA1832-GR(TE85R,F)	T	3.1/28.8
Q300	1510001100	S.TRA	2SA1832-GR(TE85R,F)	B	28.9/45.7
Q301	1590003291	S.TRA	UNR9213G0L	B	41.1/49.3
Q302	1590003231	S.TRA	UNR9113G0L	B	30.7/43.1
Q303	1590001410	S.TRA	XP1215(TX)	B	33.2/49.4
Q304	1530004000	S.TRA	2SC4738-GR(TE85L,F)	B	36.5/44.3
Q305	1590003291	S.TRA	UNR9213G0L	B	29/38.4
Q306	1590001770	S.TRA	XP1213(TX)	B	44.4/22
Q309	1590003291	S.TRA	UNR9213G0L	B	29.5/31.5
Q400	1520000651	S.TRA	2SB1201S-TL-E	B	53.6/13.2
Q401	1590001170	S.TRA	XP1501-(TX).AB	B	33.4/3.6
Q402	1510000671	S.TRA	2SA1588-GR(TE85R, F)	B	57.1/8.6
Q403	1560001330	S.FET	RSR025N03	B	36.6/11.6
Q404	1560001330	S.FET	RSR025N03	B	36.6/7.4
Q500	1530004000	S.TRA	2SC4738-GR(TE85L,F)	B	64.8/12.7
Q501	1590003291	S.TRA	UNR9213G0L	B	48.5/44.9

[LOGIC UNIT]

REF NO.	PARTS NO.	DESCRIPTION		M.	H/V LOCATION
Q502	1590003291	S.TRA	UNR9213G0L	B	45.1/30.4
Q503	1590003291	S.TRA	UNR9213G0L	B	50.6/26.4
Q504	1510001100	S.TRA	2SA1832-GR(TE85R,F)	B	49.9/31.8
Q505	1530004000	S.TRA	2SC4738-GR(TE85L,F)	B	79.3/15.6
Q506	1510001100	S.TRA	2SA1832-GR(TE85R,F)	B	47.5/31.1
Q507	1590001170	S.TRA	XP1501-(TX).AB	B	47.5/28.7
D1	1790001200	S.DIO	MA6S121(TX)	T	64.5/26.4
D2	1790001251	S.DIO	MA2S1110GL [EUR]	T	58.4/18.9
	1790001251	S.DIO	MA2S1110GL [USA]		
	1790001251	S.DIO	MA2S1110GL [FRA]		
	1790001251	S.DIO	MA2S1110GL [SEA]		
	1790001251	S.DIO	MA2S1110GL [CHN]		
	1790001251	S.DIO	MA2S1110GL [KOR]		
	1790001251	S.DIO	MA2S1110GL [EXP]		
D3	1790001251	S.DIO	MA2S1110GL [UK]	T	59.7/18.9
	1790001251	S.DIO	MA2S1110GL [FRA]		
	1790001251	S.DIO	MA2S1110GL [SEA]		
	1790001251	S.DIO	MA2S1110GL [CHN]		
	1790001251	S.DIO	MA2S1110GL [AUS]		
	1790001251	S.DIO	MA2S1110GL [EXP]		
D4	1790000850	S.DIO	MA132WK(TX) [EUR]	B	76.1/38.8
	1790000850	S.DIO	MA132WK(TX) [UK]		
	1790000850	S.DIO	MA132WK(TX) [ITR]		
	1790000850	S.DIO	MA132WK(TX) [USA]		
	1790000850	S.DIO	MA132WK(TX) [FRA]		
	1790000850	S.DIO	MA132WK(TX) [KOR]		
	1790000850	S.DIO	MA132WK(TX) [AUS]		
D6	1790001251	S.DIO	MA2S1110GL [ITR]	B	79/38.8
	1790001251	S.DIO	MA2S1110GL [FRA]		
	1790001251	S.DIO	MA2S1110GL [KOR]		
D11	1790001251	S.DIO	MA2S1110GL [ITR]	T	56.8/23.8
	1790001251	S.DIO	MA2S1110GL [USA]		
	1790001251	S.DIO	MA2S1110GL [SEA]		
	1790001251	S.DIO	MA2S1110GL [CHN]		
	1790001251	S.DIO	MA2S1110GL [AUS]		
	1790001251	S.DIO	MA2S1110GL [EXP]		
D12	1790001251	S.DIO	MA2S1110GL [FRA]	T	55.6/23.8
	1790001251	S.DIO	MA2S1110GL [KOR]		
D13	1790001261	S.DIO	MA2S077G0L	T	17.3/17.9
D50	1790001241	S.DIO	MA2S7280GL	T	17.5/12.8
D51	1790001251	S.DIO	MA2S1110GL	T	20.3/17.3
D53	1730002301	S.ZEN	MAZ8082GML	T	29.9/11.8
D54	1790001251	S.DIO	MA2S1110GL	T	27.9/10.9
D100	1790001251	S.DIO	MA2S1110GL	B	21/20.1
D102	1750001630	S.DIO	RB161VA-20TR	B	85.8/41.2
D103	1790001241	S.DIO	MA2S7280GL	B	85.7/24.5
D125	1750000880	S.DIO	RB551V-30TE-17	T	37.8/37
D150	1790000860	S.DIO	MA133(TX)	T	42/18.1
D151	1790000671	S.DIO	SB07-03C-TB-E	T	38.7/17.3
D200	1790001251	S.DIO	MA2S1110GL	T	37.1/13.5
D300	1790001810	S.VAR	AVR-M1005C080MTABB	B	40.3/47.4
D500	1790001241	S.DIO	MA2S7280GL	B	80.7/25.7
X1	6050012730	S.XTA	CR-864(SMD-49/12.288 MHz) <JJE>	B	16.8/16.6
X500	6050012850	S.XTA	CR-877 TTS18NSE-A11 9.8304 MHz	B	69.4/11
X501	6050012840	S.XTA	CR-876 TTS18NSE-A11 16.384 MHz	B	78.2/11
L100	6190001561	S.COI	CDRH5D18NP-101NC	T	41.3/41
L101	6190001571	S.COI	CDRH5D28NP-101NC 100U	B	87.6/33.8
R1	7410001130	S.ARR	EXB28V102JX	T	26.8/21
R2	7410001130	S.ARR	EXB28V102JX	T	25.1/19.2
R4	7030009160	S.RES	ERJ2GEJ 181 X (180)	T	11.4/19.6
R8	7030005240	S.RES	ERJ2GEJ 473 X (47K)	T	29.6/24.4
R9	7030005530	S.RES	ERJ2GEJ 100 X (10)	T	15.9/20.6
R10	7030005160	S.RES	ERJ2GEJ 105 X (1M)	T	15.9/19.7
R11	7030008010	S.RES	ERJ2GEJ 123 X (12K)	T	16.4/15.6
R12	7030005530	S.RES	ERJ2GEJ 100 X (10)	T	11.5/14.1
R14	7030008010	S.RES	ERJ2GEJ 123 X (12K)	T	15.9/17.9
R16	7030008010	S.RES	ERJ2GEJ 123 X (12K)	T	30.6/34
R20	7030005040	S.RES	ERJ2GEJ 472 X (4.7K)	T	16.7/39.2
R21	7410001250	S.ARR	EXB28V472JX	T	30/22.6
R22	7030010040	S.RES	ERJ2GEJ-JPW	T	12.5/18
R26	7030004980	S.RES	ERJ2GEJ 101 X (100)	T	18.6/17.5
R28	7030010040	S.RES	ERJ2GEJ-JPW	T	14.3/39
R50	7030005120	S.RES	ERJ2GEJ 102 X (1K)	T	18.9/15.5
R51	7030005090	S.RES	ERJ2GEJ 104 X (100K)	T	19.5/10.2
R52	7030005090	S.RES	ERJ2GEJ 104 X (100K)	T	18.8/12.4
R53	7030005240	S.RES	ERJ2GEJ 473 X (47K)	B	9.9/45.3
R54	7030005040	S.RES	ERJ2GEJ 472 X (4.7K)	B	9/45.3
R55	7030005240	S.RES	ERJ2GEJ 473 X (47K)	T	23.5/17.4
R56	7030005120	S.RES	ERJ2GEJ 102 X (1K)	T	24.4/15.1
R57	7030005240	S.RES	ERJ2GEJ 473 X (47K)	T	27.6/12.7
R58	7030005050	S.RES	ERJ2GEJ 103 X (10K)	T	28.5/12.7
R60	7030005090	S.RES	ERJ2GEJ 104 X (100K)	T	29.4/43.6
R62	7030004980	S.RES	ERJ2GEJ 101 X (100)	T	23/48.5
R63	7030004980	S.RES	ERJ2GEJ 101 X (100)	T	12.1/43.1
R66	7510001770	S.THE	NTCG10 4LH 473JT	T	17.7/15.1
R67	7030005840	S.RES	RR0510P-473-D (47K)	T	17.7/16
R68	7030005050	S.RES	ERJ2GEJ 103 X (10K)	T	20.7/16
R69	7030008010	S.RES	ERJ2GEJ 123 X (12K)	T	18.7/11.2
R70	7030008290	S.RES	ERJ2GEJ 183 X (18K)	T	19.8/16
R71	7030005240	S.RES	ERJ2GEJ 473 X (47K)	T	22.4/13.2
R100	7030005090	S.RES	ERJ2GEJ 104 X (100K)	T	13.2/14.1
R101	7030011930	S.RES	RP1005S-R56-F (0.56)	B	82.6/49.6
R102	7030011930	S.RES	RP1005S-R56-F (0.56)	B	82.6/48.7

M.=Mounted side (T: Mounted on the Top side, B: Mounted on the Bottom side)
S.=Surface mount

[LOGIC UNIT]

REF NO.	PARTS NO.	DESCRIPTION	M.	H/V LOCATION
R105	7030005050	S.RES ERJ2GEJ 103 X (10K)	B	90/46.1
R107	7030007340	S.RES ERJ2GEJ 153 X (15K)	B	80.9/48.5
R108	7030010040	S.RES ERJ2GEJ-JPW	B	88.6/22.3
R110	7030005240	S.RES ERJ2GEJ 473 X (47K)	B	89.6/19
R111	7030007320	S.RES ERJ2GEJ 225 X (2.2M)	B	87.4/22.8
R112	7030005230	S.RES ERJ2GEJ 334 X (330K)	B	85.8/22.8
R113	7030007320	S.RES ERJ2GEJ 225 X (2.2M)	B	86.3/19.1
R114	7030005160	S.RES ERJ2GEJ 105 X (1M)	B	84.8/18.6
R115	7030008270	S.RES RR0510P-104-D (100K)	B	88.6/40.8
R116	7030005830	S.RES RR0510P-223-D (22K)	B	89.8/41.3
R117	7030007310	S.RES ERJ2GEJ 155 X (1.5M)	B	84.8/19.5
R136	7030007250	S.RES ERJ2GEJ 220 X (22)	T	49.5/43.7
R150	7030003210	S.RES ERJ3GEYJ 120 V (12)	B	85.5/5.9
R151	7030003220	S.RES ERJ3GEYJ 150 V (15)	B	86.7/5.9
R152	7030003210	S.RES ERJ3GEYJ 120 V (12)	B	80.4/4.8
R153	7030003210	S.RES ERJ3GEYJ 120 V (12)	B	81.6/4.8
R154	7030005120	S.RES ERJ2GEJ 102 X (1K)	B	84.2/4.6
R155	7030005120	S.RES ERJ2GEJ 102 X (1K)	T	45.4/22.4
R156	7030010990	S.RES RR0510P-272-D (2.7K)	T	41.7/21.9
R157	7030006000	S.RES RR0510P-222-D (2.2K)	T	41.5/23.1
R158	7030007280	S.RES ERJ2GEJ 331 X (330)	T	43.1/23.9
R161	7030005820	S.RES RR0510P-103-D (10K)	T	41.5/24
R203	7030007280	S.RES ERJ2GEJ 331 X (330)	T	38.8/13
R204	7030007280	S.RES ERJ2GEJ 331 X (330)	T	39.7/12.3
R205	7030008280	S.RES ERJ2GEJ 271 X (270)	T	56.2/47.5
R206	7030004990	S.RES ERJ2GEJ 221 X (220)	T	58/46.6
R207	7030007280	S.RES ERJ2GEJ 331 X (330)	T	59.9/46.6
R208	7030008280	S.RES ERJ2GEJ 271 X (270)	T	61.1/47
R209	7030008280	S.RES ERJ2GEJ 271 X (270)	T	59/46.6
R210	7030007280	S.RES ERJ2GEJ 331 X (330)	T	62.8/47.5
R211	7030007280	S.RES ERJ2GEJ 331 X (330)	T	67.5/48.4
R212	7030007280	S.RES ERJ2GEJ 331 X (330)	T	57.1/46.9
R213	7030007260	S.RES ERJ2GEJ 330 X (33)	T	3.7/24.8
R214	7030007260	S.RES ERJ2GEJ 330 X (33)	T	3.7/26.7
R215	7030007260	S.RES ERJ2GEJ 330 X (33)	T	3.8/32.4
R217	7030005050	S.RES ERJ2GEJ 103 X (10K)	T	3.3/30.7
R218	7030005120	S.RES ERJ2GEJ 102 X (1K)	T	2.4/30.7
R219	7030005530	S.RES ERJ2GEJ 100 X (10)	T	52.9/48.5
R300	7030005000	S.RES ERJ2GEJ 471 X (470)	B	28.3/42.6
R301	7030005050	S.RES ERJ2GEJ 103 X (10K)	B	30.3/46.6
R302	7030005120	S.RES ERJ2GEJ 102 X (1K)	B	28.7/49.1
R303	7030005110	S.RES ERJ2GEJ 224 X (220K)	B	26.3/43.8
R304	7030007290	S.RES ERJ2GEJ 222 X (2.2K)	B	28.8/50.6
R305	7030005060	S.RES ERJ2GEJ 333 X (33K)	B	41.2/47.4
R306	7030005120	S.RES ERJ2GEJ 102 X (1K)	B	42.1/47.4
R307	7030005040	S.RES ERJ2GEJ 472 X (4.7K)	B	34.6/45.9
R308	7030008400	S.RES ERJ2GEJ 182 X (1.8K)	B	33.8/47.1
R309	7030008400	S.RES ERJ2GEJ 182 X (1.8K)	B	32.9/47.1
R310	7030004980	S.RES ERJ2GEJ 101 X (100)	B	32.5/44.5
R311	7030007300	S.RES ERJ2GEJ 332 X (3.3K)	B	33.4/44.5
R312	7030005080	S.RES ERJ2GEJ 823 X (82K)	B	34.6/44.1
R314	7030005120	S.RES ERJ2GEJ 102 X (1K)	B	37.9/45.5
R315	7030010040	S.RES ERJ2GEJ-JPW	B	38/43.9
R316	7030005030	S.RES ERJ2GEJ 152 X (1.5K)	B	34.7/38.7
R317	7030008410	S.RES ERJ2GEJ 392 X (3.9K)	B	33.5/39.2
R318	7030005070	S.RES ERJ2GEJ 683 X (68K)	B	36.3/39.6
R319	7030005050	S.RES ERJ2GEJ 103 X (10K)	B	27.9/35.5
R320	7030007340	S.RES ERJ2GEJ 153 X (15K)	B	28.3/34.3
R321	7030005010	S.RES ERJ2GEJ 681 X (680)	B	31/35.2
R322	7030005040	S.RES ERJ2GEJ 472 X (4.7K)	B	29.7/34
R323	7030010040	S.RES ERJ2GEJ-JPW	B	37.1/32.8
R325	7030005240	S.RES ERJ2GEJ 473 X (47K)	B	31.5/38.6
R326	7030008300	S.RES ERJ2GEJ 184 X (180K)	B	35.9/32.3
R327	7030005160	S.RES ERJ2GEJ 105 X (1M)	B	37/36.4
R328	7030007340	S.RES ERJ2GEJ 153 X (15K)	B	34.7/31
R329	7030005100	S.RES ERJ2GEJ 154 X (150K)	B	42.4/24.4
R330	7030005000	S.RES ERJ2GEJ 471 X (470)	B	40.3/22.8
R331	7030009140	S.RES ERJ2GEJ 272 X (2.7K)	B	40.3/21.8
R333	7030005080	S.RES ERJ2GEJ 823 X (82K)	B	38.7/22.8
R334	7030005070	S.RES ERJ2GEJ 683 X (68K)	B	35.5/22.8
R335	7030007350	S.RES ERJ2GEJ 393 X (39K)	B	37.1/22.8
R336	7030005080	S.RES ERJ2GEJ 823 X (82K)	B	39.5/20.9
R337	7030007350	S.RES ERJ2GEJ 393 X (39K)	B	39.3/19.4
R338	7030005050	S.RES ERJ2GEJ 103 X (10K)	B	31.7/30.1
R339	7030007350	S.RES ERJ2GEJ 393 X (39K)	B	32.1/32
R340	7030008410	S.RES ERJ2GEJ 392 X (3.9K)	B	33/32
R341	7030007290	S.RES ERJ2GEJ 222 X (2.2K)	B	32.5/24.6
R342	7030007290	S.RES ERJ2GEJ 222 X (2.2K)	B	32.5/23.7
R343	7030005030	S.RES ERJ2GEJ 152 X (1.5K)	B	29.2/24.1
R344	7030008300	S.RES ERJ2GEJ 184 X (180K)	B	32.8/27.5
R345	7030005090	S.RES ERJ2GEJ 104 X (100K)	B	34/28.7
R346	7030005090	S.RES ERJ2GEJ 104 X (100K)	B	37/29.6
R347	7030005090	S.RES ERJ2GEJ 104 X (100K)	B	47.7/34.6
R348	7030005110	S.RES ERJ2GEJ 224 X (220K)	B	37.9/29.6
R349	7030007340	S.RES ERJ2GEJ 153 X (15K)	B	39.7/29.6
R350	7030007340	S.RES ERJ2GEJ 153 X (15K)	B	38.8/29.6
R351	7030004980	S.RES ERJ2GEJ 101 X (100)	B	43.6/24.2
R352	7030005120	S.RES ERJ2GEJ 102 X (1K)	B	26.7/42.6
R353	7030005240	S.RES ERJ2GEJ 473 X (47K)	B	30.6/36.4
R400	7030000170	S.RES MCR10EZHJ 18 (180)	B	52/6.7
R401	7030000040	S.RES MCR10EZHJ 1.5 (1R5)	B	55.3/6.4
R402	7030005040	S.RES ERJ2GEJ 472 X (4.7K)	B	55.1/7.8
R403	7030005160	S.RES ERJ2GEJ 105 X (1M)	B	26.3/3.9
R404	7030005600	S.RES ERJ2GEJ 273 X (27K)	B	26.3/3
R405	7030005120	S.RES ERJ2GEJ 102 X (1K)	B	30.5/3.4
R406	7030005220	S.RES ERJ2GEJ 223 X (22K)	B	32.3/5.6
R407	7030009710	S.RES ERJ2GEJ 203 X (20K)	B	33.5/5.3
R408	7030005030	S.RES ERJ2GEJ 152 X (1.5K)	B	32.2/34.7
R409	7030005050	S.RES ERJ2GEJ 103 X (10K)	B	31.8/37
R410	7030005220	S.RES ERJ2GEJ 223 X (22K)	B	48.4/19.5
R412	7030007260	S.RES ERJ2GEJ 330 X (33)	B	57.3/21.1
R413	7030005530	S.RES ERJ2GEJ 100 X (10)	B	57.3/17
R414	7030005120	S.RES ERJ2GEJ 102 X (1K)	B	34.2/12.9
R415	7030000170	S.RES MCR10EZHJ 18 (180)	B	52/8.4

[LOGIC UNIT]

REF NO.	PARTS NO.	DESCRIPTION	M.	H/V LOCATION
R416	7030005120	S.RES ERJ2GEJ 102 X (1K)	B	37.6/5.3
R501	7030005120	S.RES ERJ2GEJ 102 X (1K)	B	65.3/15.1
R502	7030005090	S.RES ERJ2GEJ 104 X (100K)	B	65.3/14.2
R503	7030004990	S.RES ERJ2GEJ 221 X (220)	B	64.9/11.2
R504	7030004980	S.RES ERJ2GEJ 101 X (100)	B	66/17.3
R505	7030010040	S.RES ERJ2GEJ-JPW	B	61.4/12.2
R506	7410001140	S.ARR EXB28V104JX	B	51.4/40.2
R510	7030005090	S.RES ERJ2GEJ 104 X (100K)	B	51.5/42
R511	7030005090	S.RES ERJ2GEJ 104 X (100K)	B	44.1/44.4
R512	7030005090	S.RES ERJ2GEJ 104 X (100K)	B	43.8/46.8
R513	7030006610	S.RES ERJ2GEJ 394 X (390K)	B	40.8/36.1
R514	7030005240	S.RES ERJ2GEJ 473 X (47K)	B	42.8/31.4
R515	7030005220	S.RES ERJ2GEJ 223 X (22K)	B	45/34.6
R516	7030005050	S.RES ERJ2GEJ 103 X (10K)	B	51.7/30.7
R517	7030005050	S.RES ERJ2GEJ 103 X (10K)	B	50/30.2
R518	7030005530	S.RES ERJ2GEJ 100 X (10)	B	50.8/33.1
R519	7030005240	S.RES ERJ2GEJ 473 X (47K)	B	75.7/42.9
R520	7030005090	S.RES ERJ2GEJ 104 X (100K)	B	46.4/44.6
R521	7030005170	S.RES ERJ2GEJ 474 X (470K)	B	48.2/47.1
R522	7030005240	S.RES ERJ2GEJ 473 X (47K)	B	47/46.9
R523	7030005240	S.RES ERJ2GEJ 473 X (47K)	B	53.5/44.6
R524	7030005090	S.RES ERJ2GEJ 104 X (100K)	B	57.8/47.1
R525	7030004980	S.RES ERJ2GEJ 101 X (100)	B	54.7/49.8
R526	7030005240	S.RES ERJ2GEJ 473 X (47K)	B	57.8/46
R527	7030005010	S.RES ERJ2GEJ 681 X (680)	B	62.1/38.5
R528	7030005120	S.RES ERJ2GEJ 102 X (1K)	B	63.3/38.2
R530	7030004980	S.RES ERJ2GEJ 101 X (100)	B	75.8/12.8
R531	7030005120	S.RES ERJ2GEJ 102 X (1K)	B	77.8/15.2
R532	7030005090	S.RES ERJ2GEJ 104 X (100K)	B	78.7/17.3
R533	7030004990	S.RES ERJ2GEJ 221 X (220)	B	78/13.6
R534	7030007280	S.RES ERJ2GEJ 331 X (330)	B	80.4/22.5
R535	7030005120	S.RES ERJ2GEJ 102 X (1K)	B	80.7/23.7
R536	7030005240	S.RES ERJ2GEJ 473 X (47K)	B	79.2/23.3
R537	7030005040	S.RES ERJ2GEJ 472 X (4.7K)	B	48.2/26
R538	7030000180	S.RES MCR10EZHJ 22 (220)	T	64.3/36.2
R539	7030005240	S.RES ERJ2GEJ 473 X (47K)	T	64.8/29.6
R540	7030005090	S.RES ERJ2GEJ 104 X (100K)	B	71.6/50.1
R601	7030005120	S.RES ERJ2GEJ 102 X (1K)	B	24/5.4
R602	7030005120	S.RES ERJ2GEJ 102 X (1K)	B	8.4/9.2
R603	7030005120	S.RES ERJ2GEJ 102 X (1K)	B	8.4/8.3
R604	7030008370	S.RES ERJ2GEJ 561 X (560)	B	8.4/6.5
R605	7030004980	S.RES ERJ2GEJ 101 X (100)	B	20.9/5.9
R606	7030005120	S.RES ERJ2GEJ 102 X (1K)	B	8.4/7.4
R608	7030010040	S.RES ERJ2GEJ-JPW	B	49.6/29
R609	7030004980	S.RES ERJ2GEJ 101 X (100)	B	20.9/5
R615	7030007350	S.RES ERJ2GEJ 393 X (39K)	B	21.2/40.7
R616	7030005240	S.RES ERJ2GEJ 473 X (47K)	B	17.1/39.4
R617	7030005240	S.RES ERJ2GEJ 473 X (47K)	B	18.2/40.3
R618	7030005240	S.RES ERJ2GEJ 473 X (47K)	B	19.8/41.6
R619	7030005240	S.RES ERJ2GEJ 473 X (47K)	B	20.3/39.7
R620	7030005050	S.RES ERJ2GEJ 103 X (10K)	B	16.6/40.3
R621	7030005070	S.RES ERJ2GEJ 683 X (68K)	B	23.9/37.1
R622	7030005310	S.RES ERJ2GEJ 124 X (120K)	B	23/37.1
R624	7030010040	S.RES ERJ2GEJ-JPW	B	23/39.5
C1	4030016930	S.CER ECJ0EB1A104K	T	12.7/20.1
C2	4030016930	S.CER ECJ0EB1A104K	T	15.5/15.6
C3	4030016930	S.CER ECJ0EB1A104K	B	22.1/40.7
C4	4030016930	S.CER ECJ0EB1A104K	T	22.3/18.4
C5	4030017460	S.CER ECJ0EB1E102K	T	29.1/14.7
C6	4030017460	S.CER ECJ0EB1E102K	T	29.1/15.6
C7	4030017460	S.CER ECJ0EB1E102K	T	29.1/19.4
C8	4030017460	S.CER ECJ0EB1E102K	T	29.1/18.3
C9	4030017460	S.CER ECJ0EB1E102K	T	29.1/17.4
C10	4030017460	S.CER ECJ0EB1E102K	T	29.1/16.5
C11	4030016930	S.CER ECJ0EB1A104K	T	29.1/20.3
C12	4030016930	S.CER ECJ0EB1A104K	T	30.6/35.6
C13	4030017390	S.CER ECJ0EC1H180J	T	14.3/19.7
C14	4030017630	S.CER ECJ0EC1H120J	T	14.3/18.8
C15	4030017650	S.CER ECJ0EC1H270J	T	15.9/18.8
C16	4030016930	S.CER ECJ0EB1A104K	T	15.9/16.9
C32	4550007720	S.TAN TEESVP 0G 476M8R	B	22/42.3
C33	4030016930	S.CER ECJ0EB1A104K	T	15.5/38.3
C50	4030016930	S.CER ECJ0EB1A104K	T	19.5/9.3
C52	4030017460	S.CER ECJ0EB1E102K	B	10.6/40.9
C53	4030017460	S.CER ECJ0EB1E102K	T	25.6/15.5
C54	4030017460	S.CER ECJ0EB1E102K	T	25.6/14.6
C55	4030017460	S.CER ECJ0EB1E102K	T	26.7/12.7
C56	4030017460	S.CER ECJ0EB1E102K	T	24.3/10.7
C57	4030016930	S.CER ECJ0EB1A104K	T	12.1/41
C58	4030017460	S.CER ECJ0EB1E102K	T	27.2/45.1
C60	4030011810	S.CER C1608 JB 1A 224K-T	T	21.5/41.8
C61	4030011810	S.CER C1608 JB 1A 224K-T	T	22.8/41.8
C62	4030011810	S.CER C1608 JB 1A 224K-T	T	21.5/44.5
C63	4030011810	S.CER C1608 JB 1A 224K-T	T	22.8/44.5
C67	4030017620	S.CER ECJ0EC1H100C	T	19.2/49.9
C68	4030017620	S.CER ECJ0EC1H100C	T	23.9/50.1
C100	4030011600	S.CER C1608 JB 1E 104K-T	B	26.8/24.5
C101	4030017030	S.CER ECJ0EB1A273K	T	14.4/9.7
C102	4030016930	S.CER ECJ0EB1A104K	B	25.5/17.3
C103	4030019460	S.CER C1608 JB 0J 106M-T	B	25.1/18.5
C104	4550007940	S.TAN TCP0J226M8R	T	47.8/43.7
C105	4550007940	S.TAN TCP0J226M8R	T	46/43.7
C106	4550007940	S.TAN TCP0J226M8R	T	37.8/29.8
C107	4550007940	S.TAN TCP0J226M8R	T	39.4/26
C108	4030019320	S.CER C1608 X7R 1C 105K-T	B	80.7/50.4
C109	4510007980	S.ELE 16SVP22M-AIC	B	35.6/17.7
C110	4030017440	S.CER ECJ0EC1H221J	B	88.8/46.2
C111	4550007880	S.TAN TEESVB2 1A 686M8R	B	87.9/38.7
C112	4030018560	S.CER C2012 JB 1A 475K-T	B	85.8/29.7
C113	4030018860	S.CER ECJ0EB0J105K	T	52.4/45.4
C114	4030017460	S.CER ECJ0EB1E102K	T	52.4/46.3
C115	4030017460	S.CER ECJ0EB1E102K	B	90.8/18.6

M.=Mounted side (T: Mounted on the Top side, B: Mounted on the Bottom side)
S.=Surface mount

[LOGIC UNIT]

REF NO.	PARTS NO.	DESCRIPTION	M.	H/V LOCATION
C116	4030017490	S.CER C1608 JB 1A 105K-T	T	52.5/43.6
C117	4030017460	S.CER ECJ0EB1E102K	T	51.1/43.7
C118	4030016930	S.CER ECJ0EB1A104K	B	80.9/49.4
C119	4030017400	S.CER ECJ0EC1H220J	B	86.9/50.6
C120	4030017700	S.CER ECJ0EC1H151J	B	88.6/41.7
C121	4030016790	S.CER ECJ0EB1C103K	B	88.6/20.5
C123	4030017460	S.CER ECJ0EB1E102K	B	90.3/29.7
C124	4030016930	S.CER ECJ0EB1A104K	B	89.4/29.7
C150	4030017460	S.CER ECJ0EB1E102K	B	86.4/3.8
C151	4030017460	S.CER ECJ0EB1E102K	T	49.3/21.2
C152	4030017460	S.CER ECJ0EB1E102K	T	45.4/23.3
C214	4030017460	S.CER ECJ0EB1E102K	T	37.6/12.4
C215	4030017460	S.CER ECJ0EB1E102K	T	35.9/12.4
C216	4030017460	S.CER ECJ0EB1E102K	T	38.3/14.6
C217	4030017460	S.CER ECJ0EB1E102K	T	51.1/50.1
C219	4030017460	S.CER ECJ0EB1E102K	T	56/49.1
C220	4030017460	S.CER ECJ0EB1E102K	T	2.8/24.8
C221	4030017460	S.CER ECJ0EB1E102K	T	2.4/32.4
C222	4030017460	S.CER ECJ0EB1E102K	T	2.3/26.5
C223	4550007940	S.TAN TCP0J226M8R	T	54.6/49.7
C300	4030018860	S.CER ECJ0EB0J105K	B	28.2/43.8
C301	4030017460	S.CER ECJ0EB1E102K	B	28.7/47.3
C302	4030017460	S.CER ECJ0EB1E102K	B	28.7/48.2
C303	4030016950	S.CER ECJ0EB1A473K	B	27.3/43.8
C304	4030017460	S.CER ECJ0EB1E102K	B	32.1/42
C305	4030016790	S.CER ECJ0EB1C103K	B	31.6/44.5
C306	4030018860	S.CER ECJ0EB0J105K	B	34.7/47.1
C307	4030017460	S.CER ECJ0EB1E102K	B	35.6/47.1
C308	4030019460	S.CER C1608 JB 0J 106M-T	B	31.9/46.6
C309	4030016930	S.CER ECJ0EB1A104K	B	34.6/45
C310	4030019460	S.CER C1608 JB 0J 106M-T	B	39/45.2
C311	4030016930	S.CER ECJ0EB1A104K	B	34.3/42.8
C312	4030016930	S.CER ECJ0EB1A104K	B	34.7/39.6
C313	4030018860	S.CER ECJ0EB0J105K	B	37.9/39.6
C314	4030016930	S.CER ECJ0EB1A104K	B	30.6/34
C315	4030017770	S.CER ECJ0EB1E332K	B	28.8/35.5
C316	4030016790	S.CER ECJ0EB1C103K	B	29.7/36.3
C317	4030016930	S.CER ECJ0EB1A104K	B	33.9/37.8
C318	4030017460	S.CER ECJ0EB1E102K	B	30.6/38.6
C319	4030016930	S.CER ECJ0EB1A104K	B	34.7/32.8
C320	4030016790	S.CER ECJ0EB1C103K	B	36.2/37.6
C321	4030019460	S.CER C1608 JB 0J 106M-T	B	38/35.9
C322	4030017460	S.CER ECJ0EB1E102K	B	43.8/19.1
C324	4030017460	S.CER ECJ0EB1E102K	B	44.7/19.1
C325	4030016950	S.CER ECJ0EB1A473K	B	37.1/31.9
C326	4030018390	S.CER ECJ0EB1A563K	B	35.9/30.5
C327	4030017920	S.CER ECJ0EB1A683K	B	41.9/22.8
C328	4030018860	S.CER ECJ0EB0J105K	B	41.9/21.8
C329	4030017710	S.CER ECJ0EC1H181J	B	41.5/24.4
C330	4030017460	S.CER ECJ0EB1E102K	B	43.6/25.1
C331	4030018860	S.CER ECJ0EB0J105K	B	40.6/29.1
C332	4030016790	S.CER ECJ0EB1C103K	B	41.5/26.5
C333	4550007940	S.TAN TCP0J226M8R	B	42.9/27.2
C334	4030018110	S.CER ECJ0EB1H272K	B	37.3/21.7
C335	4030018140	S.CER ECJ0EB1H391K	B	34.3/22.9
C336	4030019460	S.CER C1608 JB 0J 106M-T	B	41.6/20.5
C337	4030017920	S.CER ECJ0EB1A683K	B	31.2/31.3
C338	4030017040	S.CER ECJ0EB1A333K	B	30.9/32.5
C339	4030017460	S.CER ECJ0EB1E102K	B	28/32.2
C340	4030017040	S.CER ECJ0EB1A333K	B	32.8/25.8
C341	4030016960	S.CER ECJ0EB1C183K	B	30.1/24.1
C342	4030017460	S.CER ECJ0EB1E102K	B	29.4/28.8
C343	4030018860	S.CER ECJ0EB0J105K	B	32.8/29.1
C344	4030017460	S.CER ECJ0EB1E102K	B	30.6/25.3
C347	4030017460	S.CER ECJ0EB1E102K	B	37/34.7
C400	4030017460	S.CER ECJ0EB1E102K	B	38.1/10.1
C401	4030017460	S.CER ECJ0EB1E102K	B	55.5/5
C403	4030017460	S.CER ECJ0EB1E102K	B	26.3/4.9
C404	4030017460	S.CER ECJ0EB1E102K	B	28.7/3.4
C405	4030018860	S.CER ECJ0EB0J105K	B	29.6/3.4
C408	4030017460	S.CER ECJ0EB1E102K	B	46.4/14.3
C409	4030016930	S.CER ECJ0EB1A104K	B	31.8/36.1
C412	4550006250	S.TAN TEESVA 1A 106M8R	B	50/23.6
C413	4030016930	S.CER ECJ0EB1A104K	B	46.4/15.2
C414	4510009340	S.ELE EEEHA1C101WP	B	42.1/14.6
C415	4030016950	S.CER ECJ0EB1A473K	B	57.4/18.2
C416	4510009020	S.ELE EEE0JA331P	B	44.8/5.6
C417	4030017460	S.CER ECJ0EB1E102K	B	38.8/5
C418	4030017460	S.CER ECJ0EB1E102K	B	53.6/34.4
C420	4510008040	S.ELE EEFCD 0K 330R	B	30.3/18.6
C421	4030018520	S.CER C1608 JB 0J 225M-T	B	27.7/3.9
C422	4030017420	S.CER ECJ0EC1H470J	B	57.3/20.2
C423	4030016930	S.CER ECJ0EB1A104K	B	47.5/18.6
C500	4030016930	S.CER ECJ0EB1A104K	B	71.9/10.5
C501	4030017460	S.CER ECJ0EB1E102K	B	66.5/11.4
C503	4030017460	S.CER ECJ0EB1E102K	B	66.3/12.8
C504	4030016930	S.CER ECJ0EB1A104K	B	64.9/10.3
C505	4030016930	S.CER ECJ0EB1A104K	B	65.3/16.1
C506	4030017460	S.CER ECJ0EB1E102K	B	65.1/17.3
C507	4030017400	S.CER ECJ0EC1H220J	B	44.1/45.3
C508	4030018860	S.CER ECJ0EB0J105K	B	50.8/38.2
C509	4030017460	S.CER ECJ0EB1E102K	B	50.1/44.6
C510	4030016930	S.CER ECJ0EB1A104K	B	44.4/32.9
C511	4030016930	S.CER ECJ0EB1A104K	B	43.5/34.4
C512	4030017030	S.CER ECJ0EB1A273K	B	42.1/35.2
C513	4030017030	S.CER ECJ0EB1A273K	B	40.5/37.7
C514	4030017460	S.CER ECJ0EB1E102K	B	43.5/32.8
C515	4030016930	S.CER ECJ0EB1A104K	B	41/31.4
C516	4030017760	S.CER ECJ0EB1H222K	B	46.5/33.7
C517	4030016930	S.CER ECJ0EB1A104K	B	77.8/43.7
C518	4030016930	S.CER ECJ0EB1A104K	B	73.4/43.7
C519	4030018520	S.CER C1608 JB 0J 225M-T	B	75.2/44
C520	4030017420	S.CER ECJ0EC1H470J	B	79/43.7
C521	4030019460	S.CER C1608 JB 0J 106M-T	B	61.6/40.9

[LOGIC UNIT]

REF NO.	PARTS NO.	DESCRIPTION	M.	H/V LOCATION
C522	4030016930	S.CER ECJ0EB1A104K	B	63/41.1
C523	4030016930	S.CER ECJ0EB1A104K	B	63.5/43.8
C524	4030016970	S.CER ECJ0EB1C223K	B	62.1/37.6
C525	4030016950	S.CER ECJ0EB1A473K	B	63.3/39.9
C526	4030016930	S.CER ECJ0EB1A104K	B	63.6/37
C527	4030016930	S.CER ECJ0EB1A104K	B	50.9/50
C528	4030018860	S.CER ECJ0EB0J105K	B	45.4/46.9
C529	4030016930	S.CER ECJ0EB1A104K	B	52.6/44.6
C530	4030016930	S.CER ECJ0EB1A104K	B	75.8/10.1
C531	4030016930	S.CER ECJ0EB1A104K	B	77.1/13.6
C532	4030017460	S.CER ECJ0EB1E102K	B	80.7/11
C534	4030017460	S.CER ECJ0EB1E102K	B	80.7/14.5
C535	4030016930	S.CER ECJ0EB1A104K	B	78.9/13.6
C536	4030016930	S.CER ECJ0EB1A104K	B	80.5/17.3
C537	4030016930	S.CER ECJ0EB1A104K	B	75.7/18.4
C538	4030016930	S.CER ECJ0EB1A104K	B	71.7/18.4
C539	4030016930	S.CER ECJ0EB1A104K	B	70.1/18.4
C540	4030016930	S.CER ECJ0EB1A104K	B	62.5/20.6
C541	4030016930	S.CER ECJ0EB1A104K	B	62.2/34.4
C542	4030016930	S.CER ECJ0EB1A104K	B	68.7/36.5
C543	4030016930	S.CER ECJ0EB1A104K	B	78.2/35.3
C544	4030016930	S.CER ECJ0EB1A104K	B	77/35.5
C545	4030016930	S.CER ECJ0EB1A104K	B	78.2/34.4
C546	4030017420	S.CER ECJ0EC1H470J	B	79.6/26.2
C547	4030017460	S.CER ECJ0EB1E102K	B	49.1/26
C548	4030018520	S.CER C1608 JB 0J 225M-T	B	47.1/26
C549	4030017460	S.CER ECJ0EB1E102K	B	46/26.4
C550	4030017460	S.CER ECJ0EB1E102K	B	50.8/29.3
C551	4030012610	S.CER C2012 JB 1C 474K-T	T	66.3/38.6
C552	4030018860	S.CER ECJ0EB0J105K	T	63.8/39.1
C553	4030018860	S.CER ECJ0EB0J105K	T	63.8/38.2
C554	4030018860	S.CER ECJ0EB0J105K	T	65.9/35.1
C555	4030018860	S.CER ECJ0EB0J105K	T	66.9/30.6
C556	4030016930	S.CER ECJ0EB1A104K	T	66/30.5
C557	4550007940	S.TAN TCP0J226M8R	T	66.8/36.5
C558	4030019460	S.CER C1608 JB 0J 106M-T	T	67.8/34.5
C603	4030017460	S.CER ECJ0EB1E102K	B	41.5/51.1
C606	4030017460	S.CER ECJ0EB1E102K	B	19.4/39.7
C607	4030016930	S.CER ECJ0EB1A104K	B	17.1/41.6
C608	4030016930	S.CER ECJ0EB1A104K	B	18/41.6
C609	4030016930	S.CER ECJ0EB1A104K	B	18.9/41.6
C610	4030016930	S.CER ECJ0EB1A104K	B	16.2/41.6
J1	6510025371	S.CON AXK816145WG	B	71.2/15.2
J2	6510027160	S.CON IMSA-9631S-48Y923	B	6.8/27
J50	6510024580	S.CON HSJ1621-019011	B	21.6/53.3
J600	6510024132	S.CON IMSA-9637S-40Y905	B	22.7/9.4
DS1	5030003210	LCD A01B010X 3155 LCD		
DS201	5040002670	S.LED CL-165HR/YG	T	36.5/5.1
DS202	5040003480	S.LED VFY1111C-4BX-4C-TR	T	54.1/11.1
DS203	5040003480	S.LED VFY1111C-4BX-4C-TR	T	69.1/13.1
DS204	5040003480	S.LED VFY1111C-4BX-4C-TR	T	77.5/22.7
DS205	5040003480	S.LED VFY1111C-4BX-4C-TR	T	77.3/39.9
DS206	5040003480	S.LED VFY1111C-4BX-4C-TR	T	84.3/14.1
DS207	5040003480	S.LED VFY1111C-4BX-4C-TR	T	84.8/31.3
DS208	5040003480	S.LED VFY1111C-4BX-4C-TR	T	83.8/48.5
DS209	5040003480	S.LED VFY1111C-4BX-4C-TR	T	42.6/5.1
DS210	5040003480	S.LED VFY1111C-4BX-4C-TR	T	5.6/39.5
DS211	5040003480	S.LED VFY1111C-4BX-4C-TR	T	5.6/26.7
DS212	5040003480	S.LED VFY1111C-4BX-4C-TR	T	5.6/14
MC300	7700002850	MIC EM6022P-65B-G <HOR>		
SP1	2510001420	SPE PSC-2849PA <PRI>		
W1	7120000470	JUM ERDS2T0		
W2	8900007682	CAB OPC-741A-1(P0.5,N40,L55) <TJM>		
EP50	6910018460	S.BEA MMZ1005Y102C-T	T	11.2/41
EP51	6910018460	S.BEA MMZ1005Y102C-T	T	23.9/48.5
EP52	6910018460	S.BEA MMZ1005Y102C-T	T	18.8/48.7
EP53	6910018460	S.BEA MMZ1005Y102C-T	T	23.5/51.7
EP100	6910018460	S.BEA MMZ1005Y102C-T	T	37.6/27.6
EP101	6910018460	S.BEA MMZ1005Y102C-T	T	46.9/45.7
EP102	6910018460	S.BEA MMZ1005Y102C-T	B	88.2/29.4
EP500	6910018460	S.BEA MMZ1005Y102C-T	B	72.4/11.7
EP501	6910018460	S.BEA MMZ1005Y102C-T	B	66.5/15.6
EP502	6910018460	S.BEA MMZ1005Y102C-T	B	45.6/32.6
EP503	6910018460	S.BEA MMZ1005Y102C-T	B	42.8/30.5
EP504	6910018460	S.BEA MMZ1005Y102C-T	B	76.9/43.7
EP505	6910018460	S.BEA MMZ1005Y102C-T	B	77.8/42
EP506	6910018460	S.BEA MMZ1005Y102C-T	B	62.7/42.5
EP507	6910018460	S.BEA MMZ1005Y102C-T	B	49.7/50.1
EP508	6910018460	S.BEA MMZ1005Y102C-T	B	74.1/11.7
EP509	6910018460	S.BEA MMZ1005Y102C-T	T	64.8/30.5
MP500	8510017840	S.PLA OG-321610G	B	68.1/48.7
MP510	8510017840	S.PLA OG-321610G	B	68.1/5.3

M.=Mounted side (T: Mounted on the Top side, B: Mounted on the Bottom side)
S.=Surface mount

[VCO UNIT]

REF NO.	PARTS NO.	DESCRIPTION	M.	H/V LOCATION
Q1	1530003560	S.TRA 2SC5195-T1	T	10.4/16.5
Q2	1590003281	S.TRA UNR9211G0L	T	4.6/15.1
Q51	1530003560	S.TRA 2SC5195-T1	T	14/9.6
Q52	1590003281	S.TRA UNR9211G0L	T	18.1/17.4
Q101	1530003260	S.TRA 2SC5006-T1	T	9/2.5
Q102	1590003281	S.TRA UNR9211G0L	T	19/1.8
Q200	1530003260	S.TRA 2SC5006-T1	T	8.8/10.9
Q201	1530003260	S.TRA 2SC5006-T1	T	3.8/3.5
Q202	1530003260	S.TRA 2SC5006-T1	T	5.6/11.4
D1	1750001270	S.VAR 1SV325(TPH3,F)	T	3.2/18
D2	1790001621	S.DIO 1SV308(TPL3,F)	T	7.1/16.3
D3	1750001270	S.VAR 1SV325(TPH3,F)	T	12.2/15.5
D4	1790001251	S.DIO MA2S1110GL	T	12.8/18.9
D5	1750001270	S.VAR 1SV325(TPH3,F)	T	4.4/17.3
D6	1750001270	S.VAR 1SV325(TPH3,F)	T	12.2/14.3
D51	1750000771	S.VAR HVC376BTRF-E	T	16.5/14.2
D52	1790001261	S.DIO MA2S077G0L	T	14.6/17.7
D53	1790001251	S.DIO MA2S1110GL	T	12.4/7.4
D54	1750001270	S.VAR 1SV325(TPH3,F)	T	15.6/12.4
D55	1720000651	S.VAR 1SV286(TPH3,F)	T	17.4/10.6
D100	1720000651	S.VAR 1SV286(TPH3,F)	T	17.4/1.6
D101	1750000721	S.VAR HVC375BTRF-E	T	12.2/2.2
D102	1790001261	S.DIO MA2S077G0L	T	16.8/5.4
D103	1790001251	S.DIO MA2S1110GL	T	7.4/1.6
D104	1750000721	S.VAR HVC375BTRF-E	T	13.9/3.1
L2	6200011650	S.COI LQW18AN68NG00D	T	6.8/18.3
L3	6200011660	S.COI LQW18ANR15G00D	T	5/19.1
L52	6200010850	S.COI LQW18AN22NG00D (LQW1608A22NG00)	T	14.7/13.9
L53	6200012050	S.COI LQW18AN24NG00D	T	14.7/15.1
L101	6200011031	S.COI ELJRF R10JFB	T	7.6/3.5
L102	6200010120	S.COI LQW18AN5N6C00D	T	12.3/4.7
L103	6200012060	S.COI LQW18AN9N1D00D	T	14.1/5.4
L104	6200013430	S.COI MLG1005S R15J-T		
L200	6200010991	S.COI ELJRF 47NJFB	T	2.3/1.5
L202	6200007951	S.COI ELJRF 8N2JFB (8.2)	T	3.6/10.1
L203	6200007931	S.COI ELJRF 12NJFB	T	4.1/1.5
L204	6200007961	S.COI ELJRF 6N8JFB (6.8)	T	6.3/5
R1	7030005240	S.RES ERJ2GEJ 473 X (47K)	T	6.2/15
R2	7030007290	S.RES ERJ2GEJ 222 X (2.2K)	T	8/15
R3	7030004970	S.RES ERJ2GEJ 470 X (47)	T	10.7/18.8
R4	7030005050	S.RES ERJ2GEJ 103 X (10K)	T	10.7/17.9
R5	7030005050	S.RES ERJ2GEJ 103 X (10K)	T	9.1/18.8
R6	7030005710	S.RES ERJ2GEJ 121 X (120)	T	10/13.8
R7	7030005090	S.RES ERJ2GEJ 104 X (100K)	T	11.6/12.4
R8	7030005120	S.RES ERJ2GEJ 102 X (1K)	T	2.8/16.4
R9	7030010040	S.RES ERJ2GEJ-JPW	T	11.6/13.3
R10	7030007290	S.RES ERJ2GEJ 222 X (2.2K)	T	7.1/15
R50	7030005120	S.RES ERJ2GEJ 102 X (1K)	T	17.5/13.9
R51	7030005240	S.RES ERJ2GEJ 473 X (47K)	T	16.5/17.2
R52	7030007290	S.RES ERJ2GEJ 222 X (2.2K)	T	15.6/16.4
R53	7030004970	S.RES ERJ2GEJ 470 X (47)	T	12.8/8.4
R54	7030005210	S.RES ERJ2GEJ 822 X (8.2K)	T	15.5/9.5
R55	7030005050	S.RES ERJ2GEJ 103 X (10K)	T	16.4/9.5
R56	7030007270	S.RES ERJ2GEJ 151 X (150)	T	12.3/10.2
R58	7030005600	S.RES ERJ2GEJ 273 X (27K)	T	18.9/11.8
R59	7030005600	S.RES ERJ2GEJ 273 X (27K)	T	19.8/10.2
R60	7030007290	S.RES ERJ2GEJ 222 X (2.2K)	T	13.8/16.4
R61	7030007320	S.RES ERJ2GEJ 225 X (2.2M)	T	19.8/13.4
R62	7030005090	S.RES ERJ2GEJ 104 X (100K)	T	17.7/12.7
R101	7030005240	S.RES ERJ2GEJ 473 X (47K)	T	17.9/6.5
R102	7030007290	S.RES ERJ2GEJ 222 X (2.2K)	T	15.6/6.5
R104	7030007300	S.RES ERJ2GEJ 332 X (3.3K)	T	9.2/1
R105	7030005050	S.RES ERJ2GEJ 103 X (10K)	T	9/4.7
R106	7030004990	S.RES ERJ2GEJ 221 X (220)	T	10.2/5.6
R107	7030005090	S.RES ERJ2GEJ 104 X (100K)	T	18.2/7.4
R108	7030007320	S.RES ERJ2GEJ 225 X (2.2M)	T	16.6/7.4
R109	7030008410	S.RES ERJ2GEJ 392 X (3.9K)	T	16.6/8.3
R110	7030007340	S.RES ERJ2GEJ 153 X (15K)	T	18.9/10.2
R111	7030005120	S.RES ERJ2GEJ 102 X (1K)	T	15.2/3.3
R112	7030007290	S.RES ERJ2GEJ 222 X (2.2K)	T	16.6/4.1
R113	7030005040	S.RES ERJ2GEJ 472 X (4.7K)	T	20.2/16.2
R114	7030010040	S.RES ERJ2GEJ-JPW	T	19.4/3.4
R115	7030010040	S.RES ERJ2GEJ-JPW	T	17.8/3.4
R116	7030004980	S.RES ERJ2GEJ 101 X (100)	T	10/8.2
R200	7030009160	S.RES ERJ2GEJ 181 X (180)	T	7.5/13.2
R201	7030005070	S.RES ERJ2GEJ 683 X (68K)	T	9.5/9.4
R202	7030005300	S.RES ERJ2GEJ 150 X (15)	T	8.9/7
R203	7030004970	S.RES ERJ2GEJ 470 X (47)	T	7.7/8.2
R204	7030005570	S.RES ERJ2GEJ 820 X (82)	T	7.3/7
R205	7030004970	S.RES ERJ2GEJ 470 X (47)	T	2.1/2.7
R206	7030005060	S.RES ERJ2GEJ 333 X (33K)	T	5.3/3.9
R207	7030004970	S.RES ERJ2GEJ 470 X (47)	T	5.9/8.1
R208	7030005070	S.RES ERJ2GEJ 683 X (68K)	T	5.9/9
R209	7030004990	S.RES ERJ2GEJ 221 X (220)		
C1	4030017460	S.CER ECJ0EB1E102K	T	3.1/13.6
C3	4030017690	S.CER ECJ0EC1H121J	T	9.1/17.9
C4	4030016790	S.CER ECJ0EB1C103K	T	7.9/17.6
C5	4030016790	S.CER ECJ0EB1C103K	T	5.5/17
C6	4030017460	S.CER ECJ0EB1E102K	T	3.1/15.2
C7	4030017460	S.CER ECJ0EB1E102K	T	12.8/17.5
C8	4030016790	S.CER ECJ0EB1C103K	T	11.9/17.5
C9	4030017680	S.CER ECJ0EC1H820J	T	8.8/16.6
C10	4030017460	S.CER ECJ0EB1E102K	T	10/14.7
C11	4030017530	S.CER ECJ0EC1H0R5B	T	10.3/11.9
C51	4030017460	S.CER ECJ0EB1E102K	T	18.9/13.8

[VCO UNIT]

REF NO.	PARTS NO.	DESCRIPTION	M.	H/V LOCATION
C53	4030018070	S.CER ECJ0EC1H300J	T	15.5/11.1
C54	4030017460	S.CER ECJ0EB1E102K	T	14.7/16.4
C55	4030017460	S.CER ECJ0EB1E102K	T	17.5/15.7
C56	4030017460	S.CER ECJ0EB1E102K	T	19.6/17.7
C57	4030017460	S.CER ECJ0EB1E102K	T	12.3/9.3
C58	4030017460	S.CER ECJ0EB1E102K	T	14.9/8
C59	4030017650	S.CER ECJ0EC1H270J	T	13.9/11.1
C60	4030017420	S.CER ECJ0EC1H470J	T	13.4/12.3
C61	4030017540	S.CER ECJ0EC1HR75B	T	12.3/11.1
C62	4030016930	S.CER ECJ0EB1A104K	T	19.8/11.8
C63	4030017530	S.CER ECJ0EC1H0R5B	T	16.4/11.1
C101	4030017460	S.CER ECJ0EB1E102K	T	15.9/1.5
C102	4030017500	S.CER ECJ0EC1H560J	T	15.9/2.4
C103	4030017620	S.CER ECJ0EC1H100C	T	10.8/1.1
C104	4030017460	S.CER ECJ0EB1E102K	T	14/6.5
C105	4030017460	S.CER ECJ0EB1E102K	T	17.8/4.4
C106	4030017460	S.CER ECJ0EB1E102K	T	19.8/4.5
C107	4030017460	S.CER ECJ0EB1E102K	T	7.2/4.7
C108	4030017460	S.CER ECJ0EB1E102K	T	8.1/4.7
C109	4030017390	S.CER ECJ0EC1H180J	T	10.5/2.5
C110	4030017380	S.CER ECJ0EC1H050B	T	10.2/4.7
C111	4030017350	S.CER ECJ0EC1H020B	T	10.7/6.8
C112	4030017530	S.CER ECJ0EC1H0R5B	T	12.5/1.1
C114	4030017460	S.CER ECJ0EB1E102K	T	18/8.6
C115	4030016930	S.CER ECJ0EB1A104K	T	18.9/8.6
C116	4030017460	S.CER ECJ0EB1E102K	T	19.8/7.7
C117	4030018860	S.CER ECJ0EB0J105K	T	19.8/15
C118	4030017640	S.CER ECJ0EC1H150J	T	10.2/3.8
C200	4030017460	S.CER ECJ0EB1E102K	T	8.4/12.9
C201	4030017460	S.CER ECJ0EB1E102K	T	9.1/8.2
C202	4030017460	S.CER ECJ0EB1E102K	T	2.4/5.6
C203	4030017460	S.CER ECJ0EB1E102K	T	2.3/4.4
C204	4030017460	S.CER ECJ0EB1E102K	T	5.3/5.5
C205	4030017460	S.CER ECJ0EB1E102K	T	3.2/1.5
C206	4030017460	S.CER ECJ0EB1E102K	T	5.6/12.9
C207	4030017460	S.CER ECJ0EB1E102K	T	7.2/10.5
C208	4030017460	S.CER ECJ0EB1E102K	T	3.1/11.9
C209	4030017380	S.CER ECJ0EC1H050B	T	3.3/8.3
C210	4030017380	S.CER ECJ0EC1H050B	T	2.4/8.3
C211	4030017360	S.CER ECJ0EC1H030B	T	2.7/10.1
C213	4030017590	S.CER ECJ0EC1H070C	T	5.5/2.7
J1	6510025380	S.CON AXK716147G	B	4.8/10

M.=Mounted side (T: Mounted on the Top side, B: Mounted on the Bottom side)
S.=Surface mount

SECTION 7 MECHANICAL PARTS

[CHASSIS PARTS]

REF NO.	ORDER NO.	DESCRIPTION	QTY.
J1	6510022671	SMA-R235-1	1
S702	7600000210	TP70N00E2015F-1903	1
W1*	7120000470	ERDS2T0	1
MP1	8210025280	2888 REAR PANEL (A)-1	1
MP2	8930068280	2888 D-CAP	1
MP3	8930068290	2888 JACK CAP	1
MP4	8930068300	2888 PTT RUBBER	1
MP5	8930068350	2888 PTT PLATE	1
MP6	8930068360	2888 BP PLATE	1
MP7	8860001410	2888 ANT RUG	1
MP8	8930054580	O-RING (AM)	1
MP9	8930056310	2507 TERMINAL HOLDER	1
MP10	8930054371	2372 TERMINAL SPRING-1	2
MP11	8310050391	2372 LOCK PLATE-1	1
MP12	8930054490	2372 SHAFT	1
MP13	8830001551	STEP NUT (J)-1	1
MP14	8830000881	VR NUT (I)-1	1
MP15	8930053590	O-RING (AG)	1
MP16	8930039850	SEALING WASHER (J)	3
MP17	8610007510	KNOB SPRING NO.7800	1
MP18	8810008971	0TAP 1FLAT WASHERB0 2X3.5NI-ZC3 (BT)	4
MP19	8810009511	SCREW BT B0 2X4 NI-ZC3 (BT)	1
MP20	8810008621	SCREW BT B0 2X20NI-ZK3 (BT)	2
MP21	8810009561	SCREW BT B0 2X6 NI-ZK3 (BT)	4
MP22	8810010091	SCREW BT B0 2X12NI-ZK3 (BT)	2
MP23	8810000101	SCREW PH M2X4 ZK3	1
MP24	8610013910	KNOB N-382 (Incl. MP17)	1
MP25	8930057022	THERMALLY SHEET (AE)-2	1
MP26	8930077480	3155 VR RUBBER	1
MP31	8510017990	2888 PA-A COVER	1
MP32	8860001420	2888 PA PLATE	1
MP33	8930058620	INSULATION SHEET (HE)	1
MP34	8930069680	FERRITE SHEET (P) [EUR], [UK], [ITR], [FRA] only	1
MP35	8930079410	3155 SPRING [EUR], [UK], [ITR], [FRA] only	1

[LOGIC UNIT]

REF NO.	ORDER NO.	DESCRIPTION	QTY.
J1*	6510025371	AXK816145WG	1
J2*	6510027160	IMSA-9631S-48Y923	1
J50*	6510024580	HSJ1621-019011	1
J600*	6510024132	IMSA-9637S-40Y910	1
DS1	5030003210	A01B010X	1
MC300	7700002850	EM6022P-65B-G	1
SP1	2510001420	PSC-2849PA	1
W1	7120000470	ERDS2T0	1
W2	8900007682	OPC-741A-1	1
MP1	8210025320	2888 FRONT PANEL (B)-1 (Incl. MP7) [EUR], [UK], [ITR], [FRA]	1
	8210022571	2888 FRONT PANEL-1 (Incl. MP7) [USA], [SEA], [CHN], [KOR], [AUS], [EXP]	1
MP2	8310073140	2888 WINDOW PLATE (F) [EUR], [UK], [ITR], [FRA]	1
	8310073130	2888 WINDOW PLATE (E) [USA], [SEA], [CHN], [KOR], [AUS], [EXP]	1
MP3	8310073100	2888 PLATE (A)	1
MP4	8210025210	3155 REFLECTOR	1
MP5	8930078480	2888 KEY (A)	1
MP6	8930068320	2888 MAIN SEAL	1
MP7	8930054570	870 SARAN NET (A)	1
MP8	8930048840	2135 MIC SPONGE	1
MP9	8930070610	2888 SPRING	1
MP10	8930074790	3066 LCD SPONGE	1
MP11	8930068881	2888 WINDOW SHEET-1	1
MP12	8930054221	2372 LENS-1	1
MP13	8930046020	1123 SHEET (A)-1	1
MP14	8930069550	2888 RUBBER SHEET	2
MP15	8810009511	SCREW BT B0 2X4 NI-ZC3 (BT)	6
MP16	8930070610	2888 SPRING	1
MP17	8930077920	3155 WHITE SHEET	1
MP28	8930062970	DOUBLE SIDE TAPE (AN)	1
MP29	8930049770	SPONGE (GF)	1
MP500*	8510017840	OG-321610G	1
MP510*	8510017840	OG-321610G	1

[MAIN UNIT]

REF NO.	ORDER NO.	DESCRIPTION	QTY.
J700	6510025880	TC38-108-01	1
J701	6450000131	HSJ1102-018540	1
J702*	6510022472	40FLT-SM2-TB (LF) (SN) (M)	1
J703*	6510022881	AXK5S30347YG	1
S700	2260002840	SKHLLFA010	1
S701	2260002840	SKHLLFA010	1

[RF UNIT]

REF NO.	ORDER NO.	DESCRIPTION	QTY.
J800*	6510025371	AXK816145WG	1
J1000	6450000870	HEC2711-01-020	1
J1001*	6510022861	AXK6S30447YG	1
W1*	9021295001	23/00/030/W01/W01	1
MP1	8510019530	3155 ANT PLATE	1
MP100*	8410002610	2888 PA HEATSINK	1
MP101*	8510017610	OG-542925	1
MP200*	8510017610	OG-542925	1
MP201*	6910014760	OG-503040	1

[VCO UNIT]

REF NO.	ORDER NO.	DESCRIPTION	QTY.
J1*	6510025380	AXK716147G	1
MP1	8510017470	2888 VCO CASE	1
MP2	8930069680	FERRITE SHEET (P)	1

[ACCESSORIES]

REF NO.	ORDER NO.	DESCRIPTION	QTY.
EP1	3310002150	FA-S270C	1
EP2	(Optional)	BP-217	1
EP3	(Optional)	BC-167ND [EUR], [ITR], [FRA], [SEA], [KOR]	1
	(Optional)	BC-167SA [USA], [EXP]	1
	(Optional)	BC-167SC [CHN]	1
	(Optional)	BC-167SV [AUS]	1
EP4	6910018620	BLACK HANDY STRAP	1
MP1	8930068840	2933 BELT CLIP	1
MP2	8810010470	SCREW TRUSS M3X4 SUS SSBC	2

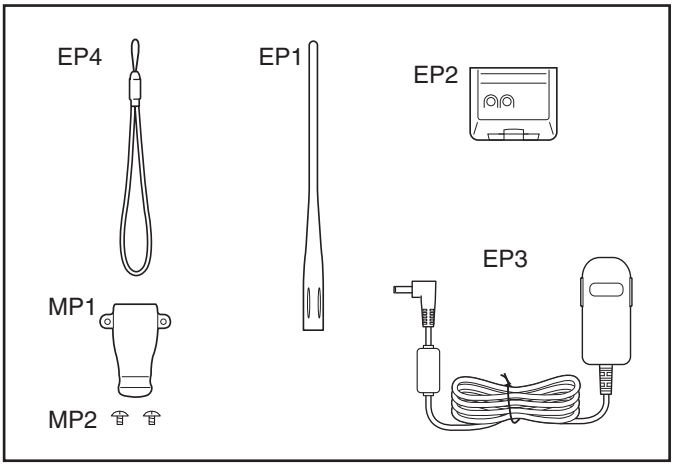

*: Refer to "**BOARD LAYOUTS**" for the location.

Screw abbreviations A, B0, BT: Self-tapping PH: Pan head ZK: Black NI-ZU: Nickel-Zinc SUS: Stainless

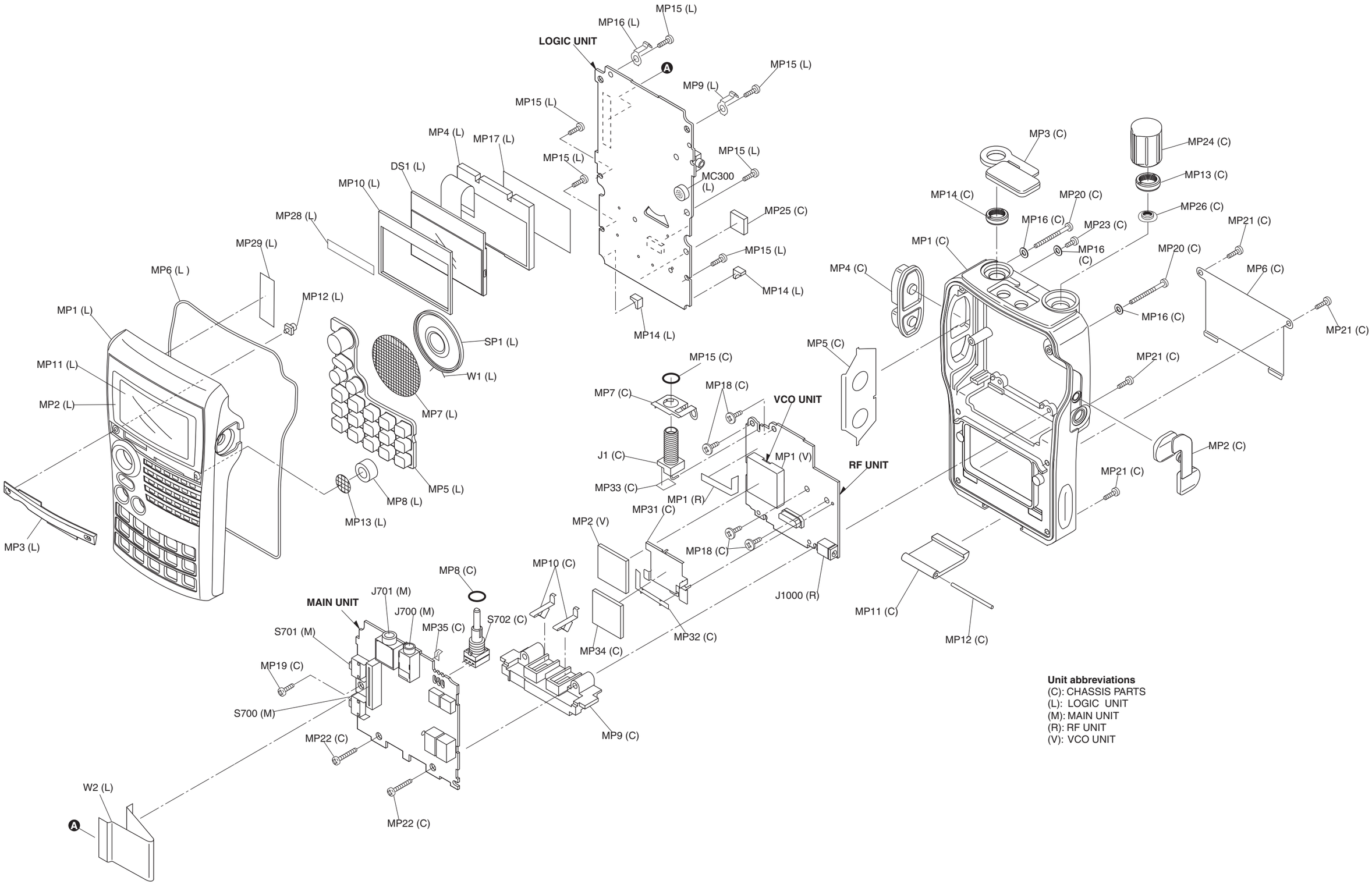
LOGIC UNIT
MP15 (L)
MP16 (L)
MP15 (L)
MP9 (L)
MP15 (L)
MP15 (L)
MP4 (L)
MP17 (L)
MP15 (L)
MP15 (L)
DS1 (L)
MC300 (L)
MP10 (L)
MP25 (C)
MP28 (L)
MP15 (L)
MP29 (L)
MP14 (L)
MP6 (L)
MP12 (L)
MP1 (L)
MP14 (L)
SP1 (L)
MP11 (L)
W1 (L)
MP2 (L)
MP7 (L)
MP5 (L)
MP8 (L)
MP13 (L)
MP3 (L)
MP3 (C)
MP24 (C)
MP13 (C)
MP14 (C)
MP20 (C)
MP26 (C)
MP16 (C)
MP23 (C)
MP21 (C)
MP1 (C)
MP16 (C)
MP20 (C)
MP4 (C)
MP6 (C)
MP16 (C)
MP21 (C)
MP5 (C)
MP21 (C)
MP15 (C)
MP18 (C)
MP7 (C)
VCO UNIT
MP2 (C)
J1 (C)
MP1 (V)
RF UNIT
MP21 (C)
MP33 (C)
MP1 (R)
MP31 (C)
MP2 (V)
MP18 (C)
MP8 (C)
MP10 (C)
J701 (M)
MAIN UNIT
J700 (M)
S702 (C)
J1000 (R)
MP11 (C)
S701 (M)
MP35 (C)
MP32 (C)
MP12 (C)
MP34 (C)
MP19 (C)
S700 (M)
MP9 (C)
MP22 (C)
W2 (L)
MP22 (C)
Unit abbreviations
(C): CHASSIS PARTS
(L): LOGIC UNIT
(M): MAIN UNIT
(R): RF UNIT
(V): VCO UNIT

The combination of top side and bottom side of this page shows the actual configuration of P.C. board.

• **LOGIC UNIT (TOP VIEW)**

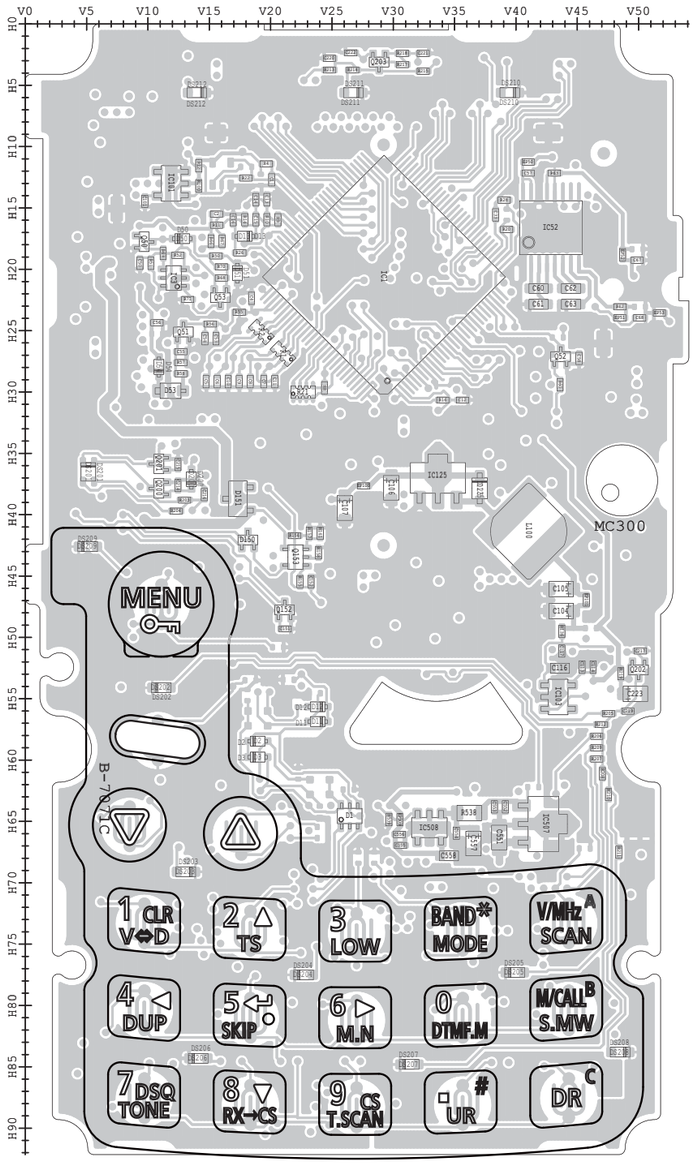

• **MAIN UNIT (TOP VIEW)**

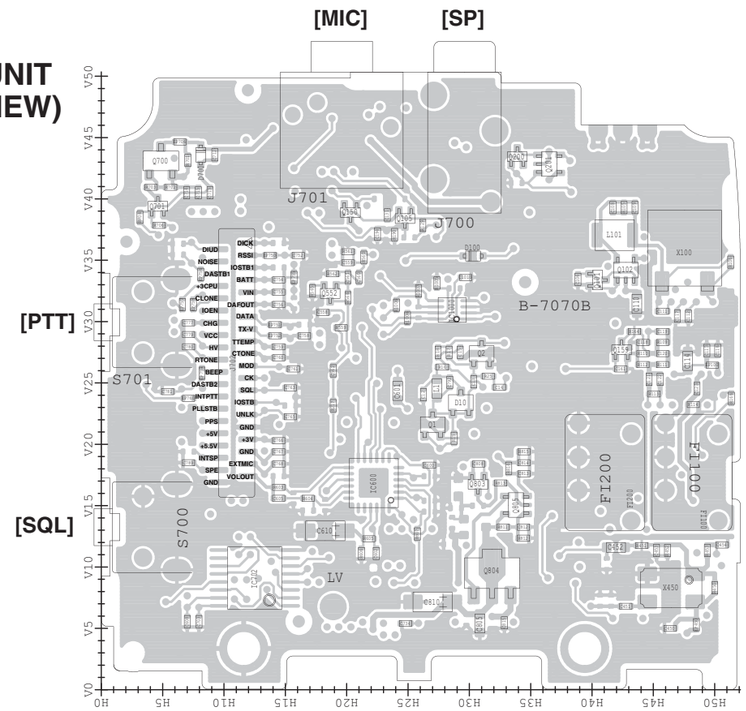

• **RF UNIT (TOP VIEW)**

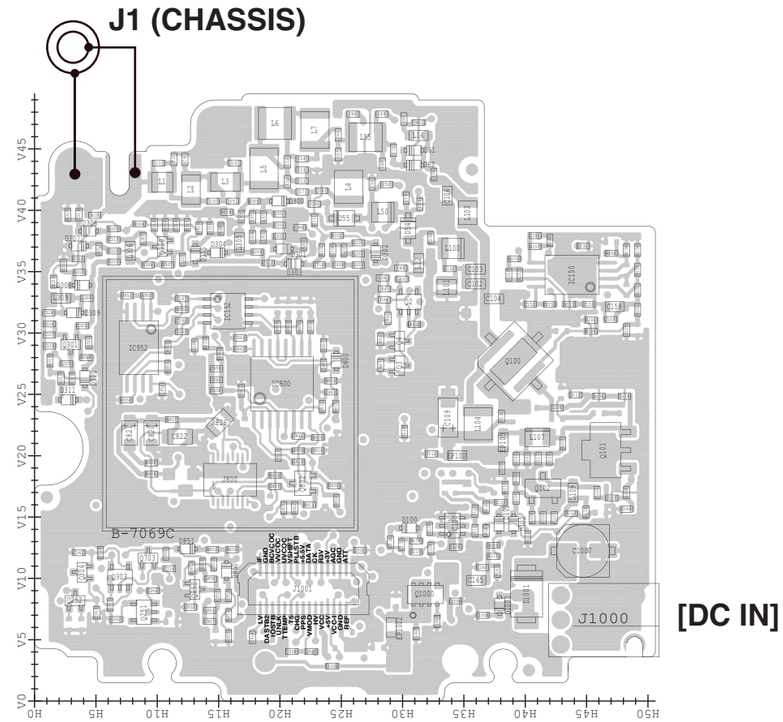

• **VCO UNIT (TOP VIEW)**

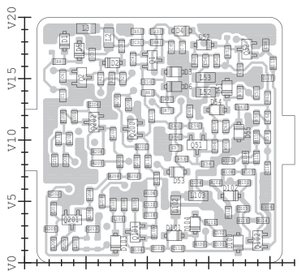

The combination of top side and bottom side of this page shows the actual configuration of P.C. board.

• MAIN UNIT (BOTTOM VIEW)

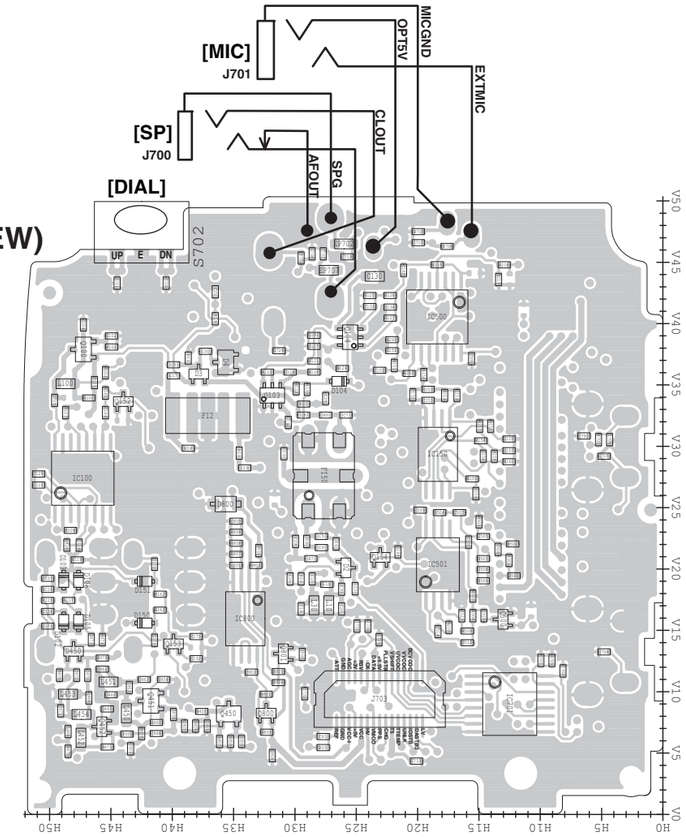

• LOGIC UNIT (BOTTOM VIEW)

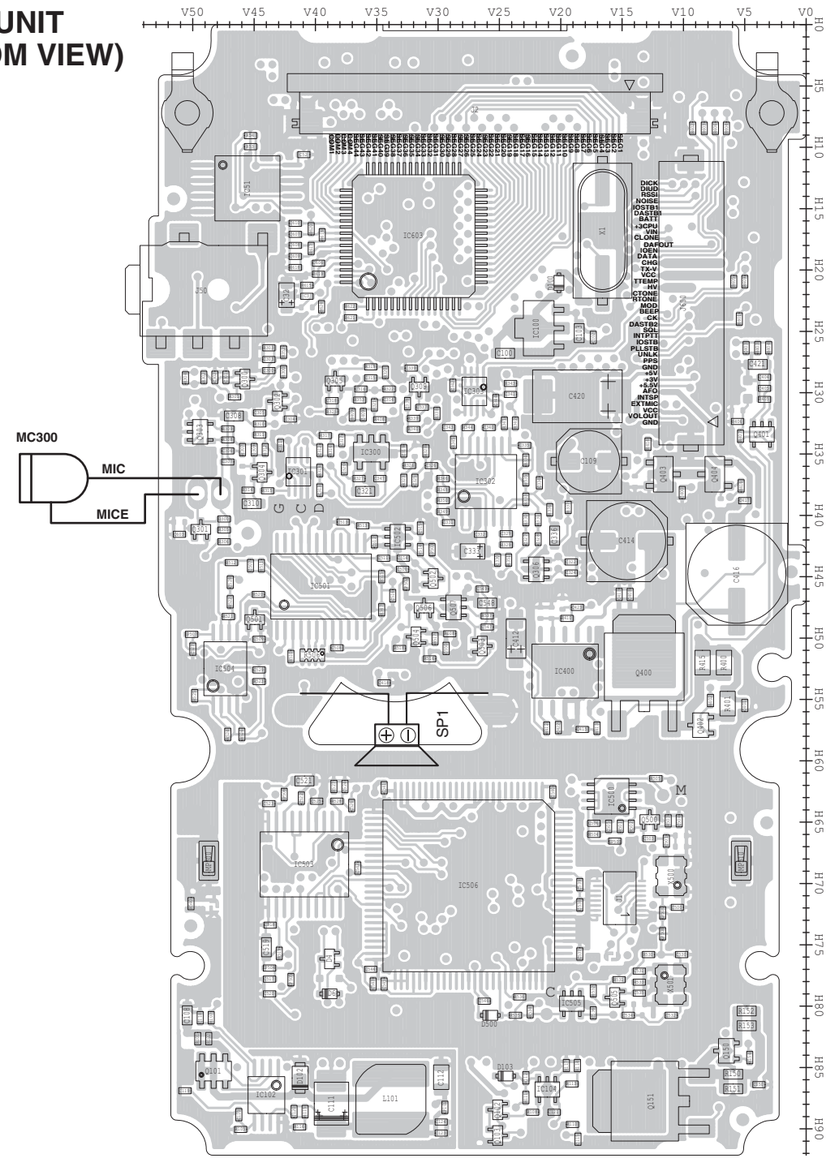

• RF UNIT (BOTTOM VIEW)

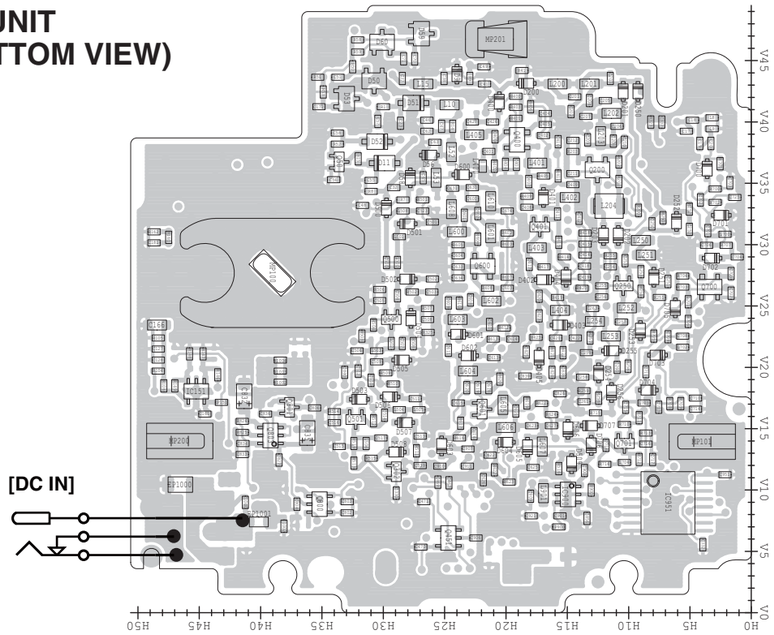

• VCO UNIT (BOTTOM VIEW)

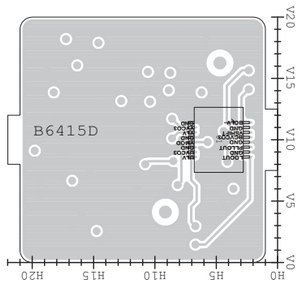

• BLOCK (1/2)

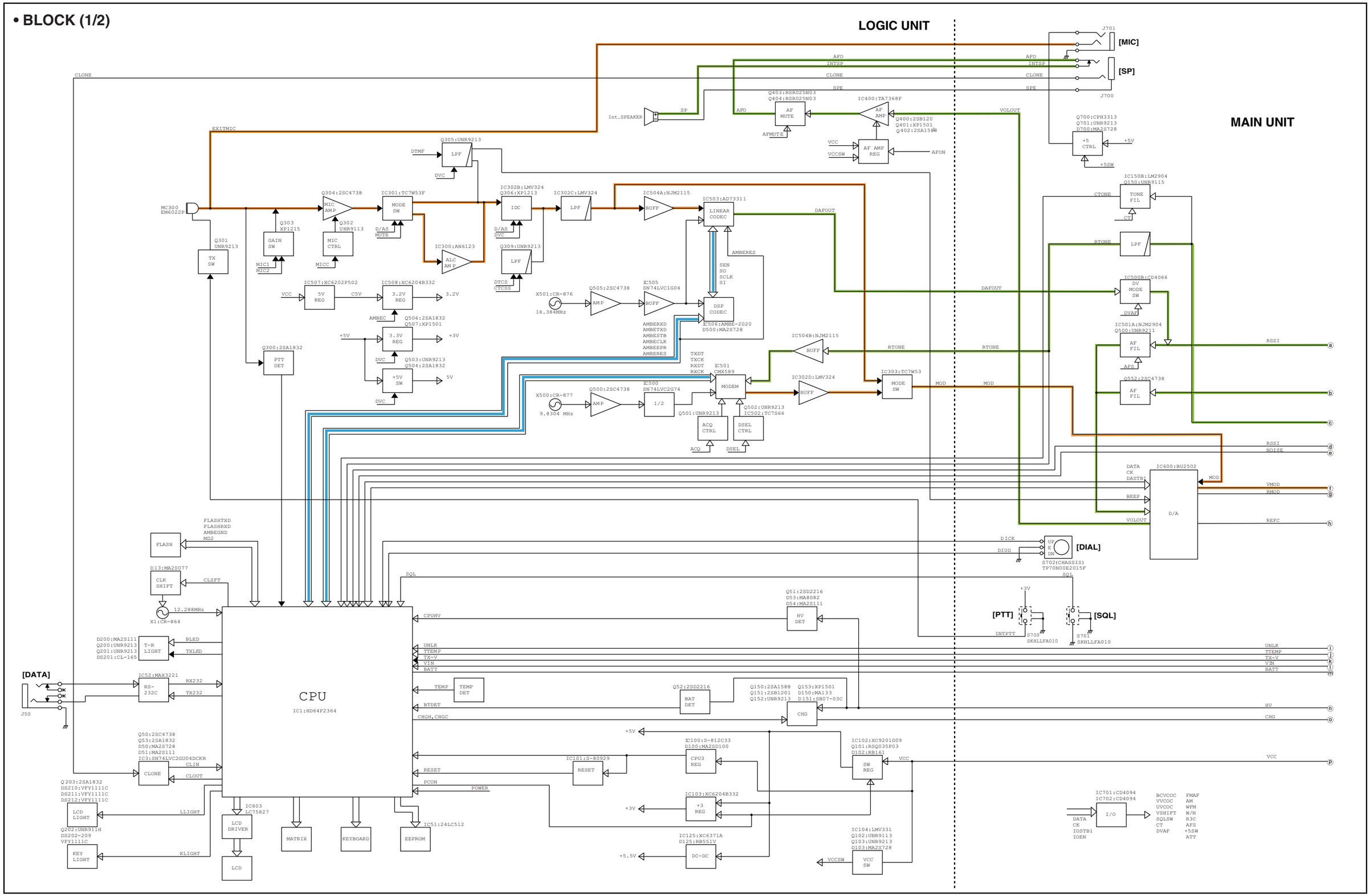
LOGIC UNIT
MAIN UNIT
[MIC]
[SP]
J701
J700
CLONE
AFO
INTSP
SPE
EXITMIC
Int.SPEAKER
SP
Q403:RSR025N03
Q404:RSR025N03
AF MUTE
AFMUTE
IC400:TA7368F
AF AMP
Q400:2SB120
Q401:XP1501
Q402:2SA1586
VCC
VCCSW
AF AMP REG
AFON
VOLOUT
Q700:CPH3313
Q701:UNR9213
D700:MA2S728
+5 CTRL
+5V
+5SW
Q305:UNR9213
DTMF
LPF
DVC
MC300
EM6022P
Q304:2SC4738
MIC AMP
IC301:TC7W53F
MODE SW
D/AS
MUTE
Q303
XP1215
GAIN SW
MIC1
MIC2
Q302
UNR9113
MIC CTRL
MICC
Q301
UNR9213
TX SW
IC300:AN6123
ALC AMP
IC302B:LMV324
Q306:XP1213
IDC
IC302C:LMV324
Q309:UNR9213
DTCS
CTCSS
IC504A:NJM2115
BUFF
IC503:AD73311
LINEAR CODEC
DAFOUT
AMBERES
SEN
SO
SCLK
SI
IC507:XC6202P502
5V REG
C5V
IC508:XC6204B332
3.2V REG
3.2V
AMBEC
Q506:2SA1832
Q507:XP1501
3.3V REG
+3V
Q503:UNR9213
Q504:2SA1832
+5V SW
5V
Q300:2SA1832
PTT DET
X501:CR-876
16.384MHz
Q505:2SC4738
AMP
IC505
SN74LVC1G04
DSP CODEC
IC506:AMBE-2020
D500:MA2S728
AMBERXD
AMBETXD
AMBESTB
AMBECLK
AMBEEPR
AMBERES
IC504B:NJM2115
RTONE
TXDT
TXCK
RXDT
RXCK
IC501
CMX589
MODEM
IC302D:LMV324
IC303:TC7W53
MOD
X500:CR-877
9.8304 MHz
Q500:2SC4738
IC500
SN74LVC2G74
1/2
Q501:UNR9213
Q502:UNR9213
IC502:TC7S66
ACQ CTRL
DSEL CTRL
ACQ
DSEL
IC150B:LM2904
Q150:UNR9115
TONE FIL
CTONE
CT
IC500B:CD4066
DV MODE SW
DVAF
IC501A:NJM2904
Q500:UNR9211
AF FIL
AFS
Q552:2SC4738
RSSI
NOISE
IC600:BU2502
D/A
DATA
CK
DASTB1
BEEP
VMOD
BMOD
REFC
FLASHTXD
FLASHRXD
AMBEGND
MD2
FLASH
D13:MA2S077
CLK SHIFT
CLSFT
12.288MHz
X1:CR-864
D200:MA2S111
Q200:UNR9213
Q201:UNR9213
DS201:CL-165
T-R LIGHT
BLED
TXLED
[DATA]
J50
IC52:MAX3221
RS-232C
RX232
TX232
Q50:2SC4738
Q53:2SA1832
D50:MA2S728
D51:MA2S111
IC3:SN74LVC2GU04DCKR
CLONE
CLIN
CLOUT
Q203:2SA1832
DS210:VFY1111C
DS211:VFY1111C
DS212:VFY1111C
LCD LIGHT
LLIGHT
Q202:UNR911H
DS202-209
VFY1111C
KEY LIGHT
KLIGHT
IC603
LC75827
LCD DRIVER
LCD
MATRIX
KEYBOARD
EEPROM
IC51:24LC512
CPU
IC1:HD64F2364
CPUHV
UNLK
TTEMP
TX-V
VIN
BATT
TEMP
TEMP DET
BTDET
CHGH,CHGC
RESET
PCON
POWER
Q51:2SD2216
D53:MA8082
D54:MA2S111
HV DET
Q52:2SD2216
BAT DET
Q150:2SA1588
Q151:2SB1201
Q152:UNR9213
Q153:XP1501
D150:MA133
D151:SB07-03C
CHG
HV
IC100:S-812C33
D100:MA2SD100
CPU3 REG
IC101:S-80929
RESET
IC102:XC9201D09
Q101:RSQ035P03
D102:RB161
SW REG
VCC
IC103:XC6204B332
+3 REG
IC125:XC6371A
D125:RB551V
DC-DC
+5.5V
IC104:LMV331
Q102:UNR9113
Q103:UNR9213
D103:MA2S728
VCC SW
VCCSW
DICK
DIUD
[DIAL]
S702(CHASSIS)
TP70N00E2015F
SQL
[PTT]
[SQL]
INTPTT
S704
SKHLLFA010
S701
SKHLLFA010
IC701:CD4094
IC702:CD4094
I/O
DATA
CK
IOSTB1
IOEN
BCVCOC
VVCOC
UVCOC
VSHIFT
SQLSW
CT
DVAF
FMAF
AM
WFM
W/N
R3C
AFS
+5SW
ATT

• BLOCK (2/2)

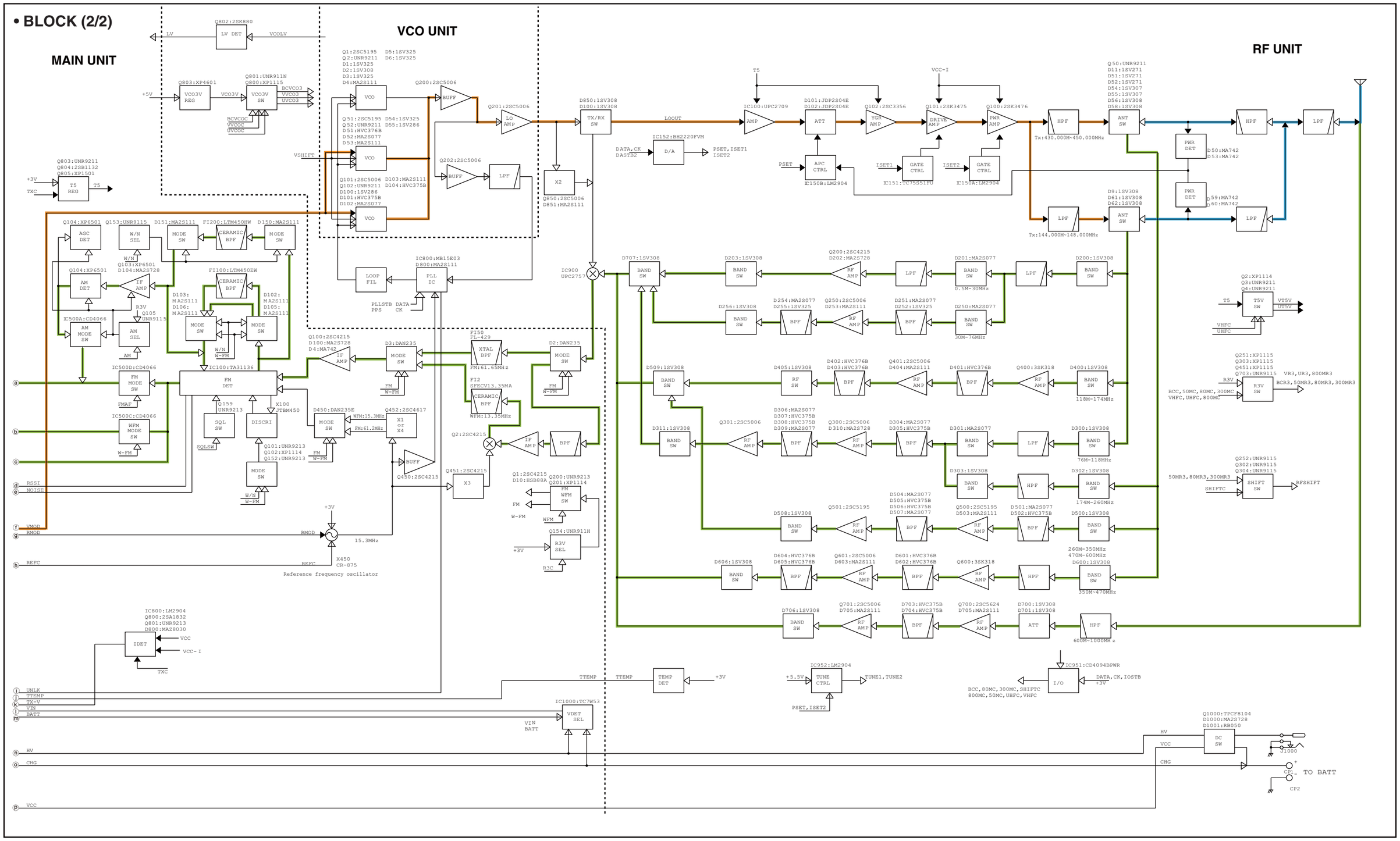
MAIN UNIT
VCO UNIT
RF UNIT
Q802:2SK880
LV DET
LV
VCOLV
Q803:XP4601
VCO3V REG
Q801:UNR911N
Q800:XP1115
VCO3V SW
BCVCO3
VVCO3
UVCO3
BCVCOC
VVCOC
UVCOC
+5V
VCO3V
Q803:UNR9211
Q804:2SB1132
Q805:XP1501
T5 REG
+3V
TXC
T5
VSHIFT
Q1:2SC5195 D5:1SV325
Q2:UNR9211 D6:1SV325
D1:1SV325
D2:1SV308
D3:1SV325
D4:MA2S111
VCO
Q51:2SC5195 D54:1SV325
Q52:UNR9211 D55:1SV286
D51:HVC376B
D52:MA2S077
D53:MA2S111
Q101:2SC5006 D103:MA2S111
Q102:UNR9211 D104:HVC375B
D100:1SV286
D101:HVC375B
D102:MA2S077
Q200:2SC5006
BUFF
Q201:2SC5006
LO AMP
Q202:2SC5006
LPF
LOOUT
D850:1SV308
D100:1SV308
TX/RX SW
X2
Q850:2SC5006
D851:MA2S111
IC152:BH2220FVM
D/A
DATA,CK
DASTB2
PSET,ISET1
ISET2
PSET
APC CTRL
IC150B:LM2904
ISET1
GATE CTRL
IC151:TC7S51FU
ISET2
GATE CTRL
IC150A:LM2904
IC100:UPC2709
AMP
VCC-I
D101:JDP2S04E
D102:JDP2S04E
ATT
Q102:2SC3356
VGR AMP
Q101:2SK3475
DRIVE AMP
Q100:2SK3476
PWR AMP
Q50:UNR9211
D11:1SV271
D51:1SV271
D52:1SV271
D54:1SV307
D55:1SV307
D56:1SV308
D58:1SV308
HPF
Tx:430.000M-450.000MHz
ANT SW
PWR DET
D50:MA742
D53:MA742
D59:MA742
D60:MA742
D9:1SV308
D61:1SV308
D62:1SV308
Tx:144.000M-148.000MHz
Q104:XP6501
AGC DET
Q153:UNR9115
W/N SEL
D151:MA2S111
MODE SW
FI200:LTM450HW
CERAMIC BPF
D150:MA2S111
W/N
Q103:XP6501
D104:MA2S728
Q104:XP6501
AM DET
IF AMP
FI100:LTM450EW
D103: MA2S111
D106: MA2S111
D102: MA2S111
D105: MA2S111
R3V
Q105 UNR9115
IC500A:CD4066
AM MODE SW
AM SEL
AM
W/N W-FM
IC500D:CD4066
FM MODE SW
FMAF
IC500C:CD4066
WFM MODE SW
W-FM
IC100:TA31136
FM DET
Q159 UNR9213
X100 JTBM450
SQL SW
DISCRI
SQLSW
Q101:UNR9213
Q102:XP1114
Q152:UNR9213
Q100:2SC4215
D100:MA2S728
D4:MA742
IF AMP
D3:DAN235
D450:DAN235E
WFM:15.3MHz
FM:61.2MHz
Q452:2SC4617
X1 or X4
BUFF
Q450:2SC4215
Q451:2SC4215
X3
IC800:MB15E03
D800:MA2S111
PLL IC
LOOP FIL
PLLSTB PPS
DATA CK
IC900 UPC2757
F150 FL-429
XTAL BPF
FM:61.65MHz
FI2 SFECV13.35MA
CERAMIC BPF
WFM:13.35MHz
D2:DAN235
Q2:2SC4215
IF AMP
BPF
Q1:2SC4215
D10:HSB88A
Q200:UNR9213
Q201:XP1114
FM WFM SW
FM
W-FM
WFM
Q154:UNR911H
R3V SEL
R3C
RSSI
NOISE
VMOD
RMOD
REFC
RMOD
REFC
15.3MHz
X450 CR-875
Reference frequency oscillator
D707:1SV308
BAND SW
D203:1SV308
Q200:2SC4215
D202:MA2S728
RF AMP
LPF
D201:MA2S077
0.5M-30MHz
D200:1SV308
D256:1SV308
D254:MA2S077
D255:1SV325
Q250:2SC5006
D253:MA2S111
D251:MA2S077
D252:1SV325
D250:MA2S077
30M-76MHz
BPF
Q2:XP1114
Q3:UNR9211
Q4:UNR9211
T5V SW
VT5V
UT5V
VHFC
UHFC
D509:1SV308
D405:1SV308
RF SW
D402:HVC376B
D403:HVC376B
Q401:2SC5006
D404:MA2S111
D401:HVC376B
Q400:3SK318
D400:1SV308
118M-174MHz
Q251:XP1115
Q303:XP1115
Q451:XP1115
Q703:UNR9115
R3V SW
VR3,UR3,800MR3
BCR3,50MR3,80MR3,300MR3
BCC,50MC,80MC,300MC
VHFC,UHFC,800MC
D311:1SV308
Q301:2SC5006
D306:MA2S077
D307:HVC375B
D308:HVC375B
D309:MA2S077
Q300:2SC5006
D310:MA2S728
D304:MA2S077
D305:HVC375B
D301:MA2S077
D300:1SV308
76M-118MHz
D303:1SV308
D302:1SV308
174M-260MHz
Q252:UNR9115
Q302:UNR9115
Q304:UNR9115
50MR3,80MR3,300MR3
SHIFTC
SHIFT SW
RFSHIFT
D508:1SV308
Q501:2SC5195
D504:MA2S077
D505:HVC375B
D506:HVC375B
D507:MA2S077
Q500:2SC5195
D503:MA2S111
D501:MA2S077
D502:HVC375B
D500:1SV308
260M-350MHz
470M-600MHz
D606:1SV308
D604:HVC376B
D605:HVC376B
Q601:2SC5006
D603:MA2S111
D601:HVC376B
D602:HVC376B
Q600:3SK318
D600:1SV308
350M-470MHz
D706:1SV308
Q701:2SC5006
D705:MA2S111
D703:HVC375B
D704:HVC375B
Q700:2SC5624
D705:MA2S111
D700:1SV308
D701:1SV308
ATT
600M-1000MHz
IC800:LM2904
Q800:2SA1832
Q801:UNR9213
D800:MAZ8030
IDET
VCC
VCC-I
TXC
UNLK
TTEMP
TX-V
VIN
BATT
TTEMP
TEMP DET
+3V
IC952:LM2904
+5.5V
TUNE CTRL
TUNE1,TUNE2
PSET,ISET2
IC951:CD4094BPWR
I/O
+3V
DATA,CK,IOSTB
BCC,80MC,300MC,SHIFTC
800MC,50MC,UHFC,VHFC
IC1000:TC7W53
VDET SEL
VIN
BATT
HV
CHG
VCC
Q1000:TPCF8104
D1000:MA2S728
D1001:RB050
DC SW
HV
VCC
CHG
J1000
CP1
CP2
TO BATT

LOGIC UNIT (1/2)

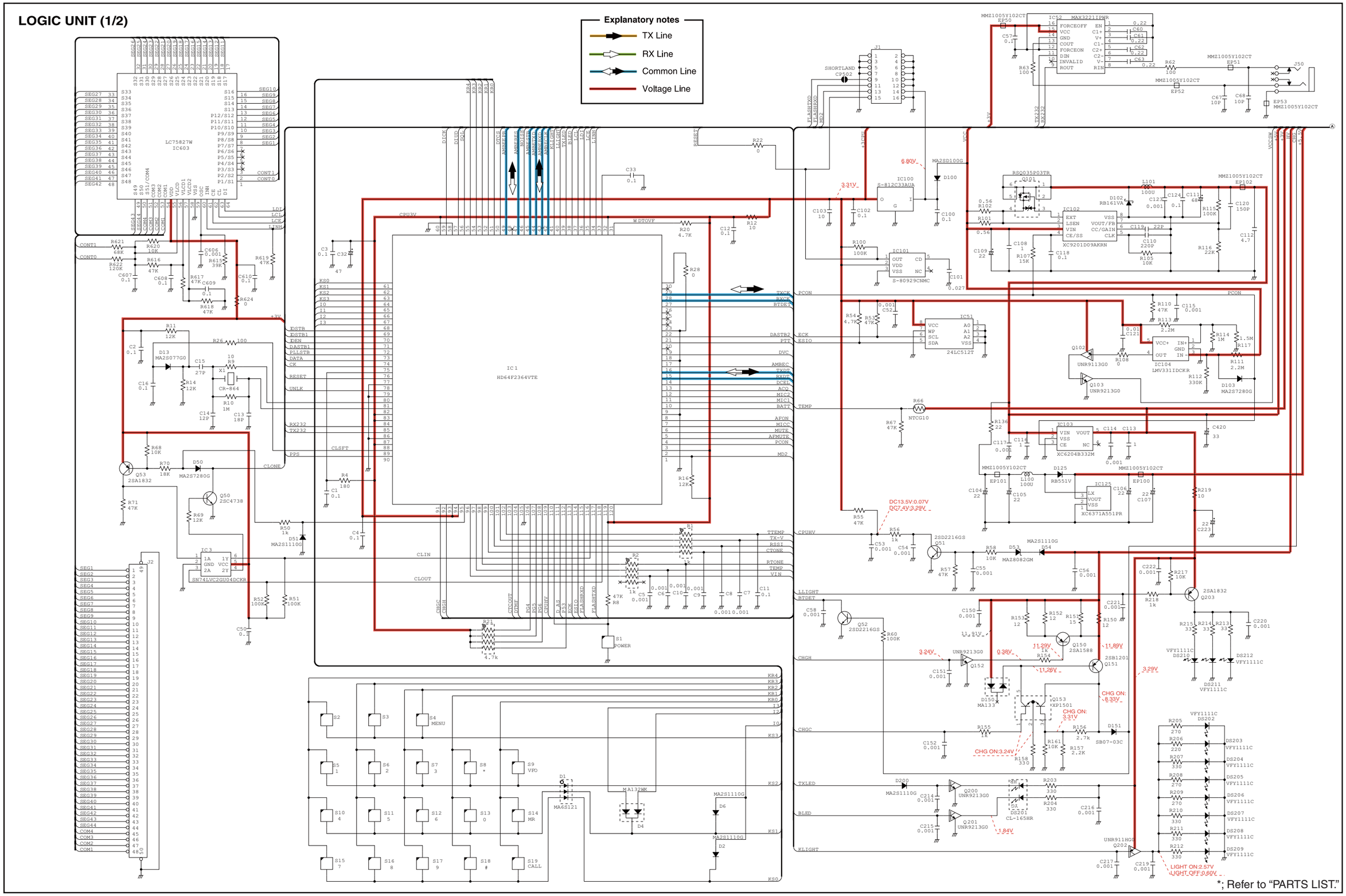

LOGIC UNIT (2/2)

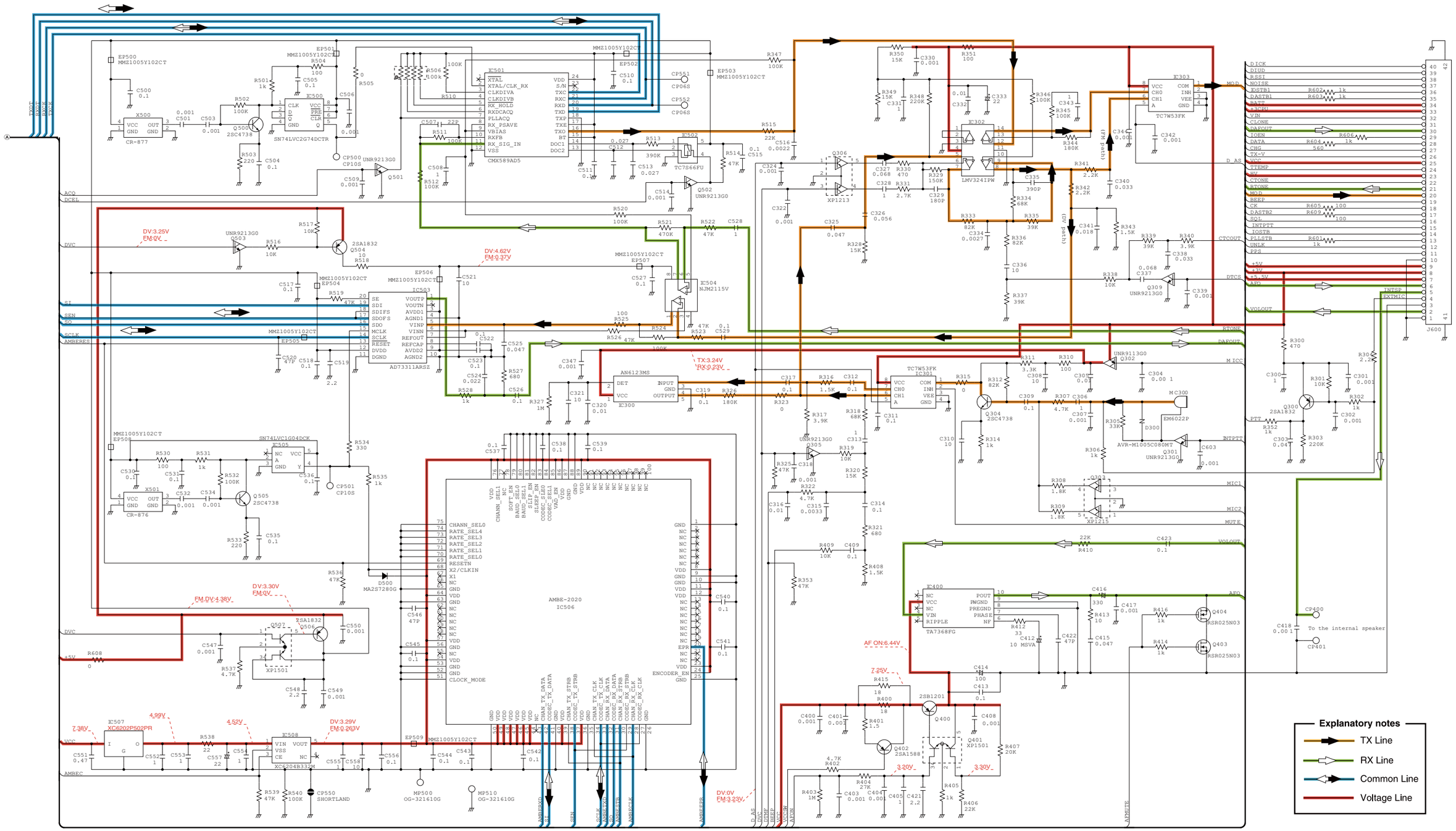

*; Refer to "PARTS LIST."

MAIN UNIT (1/2)

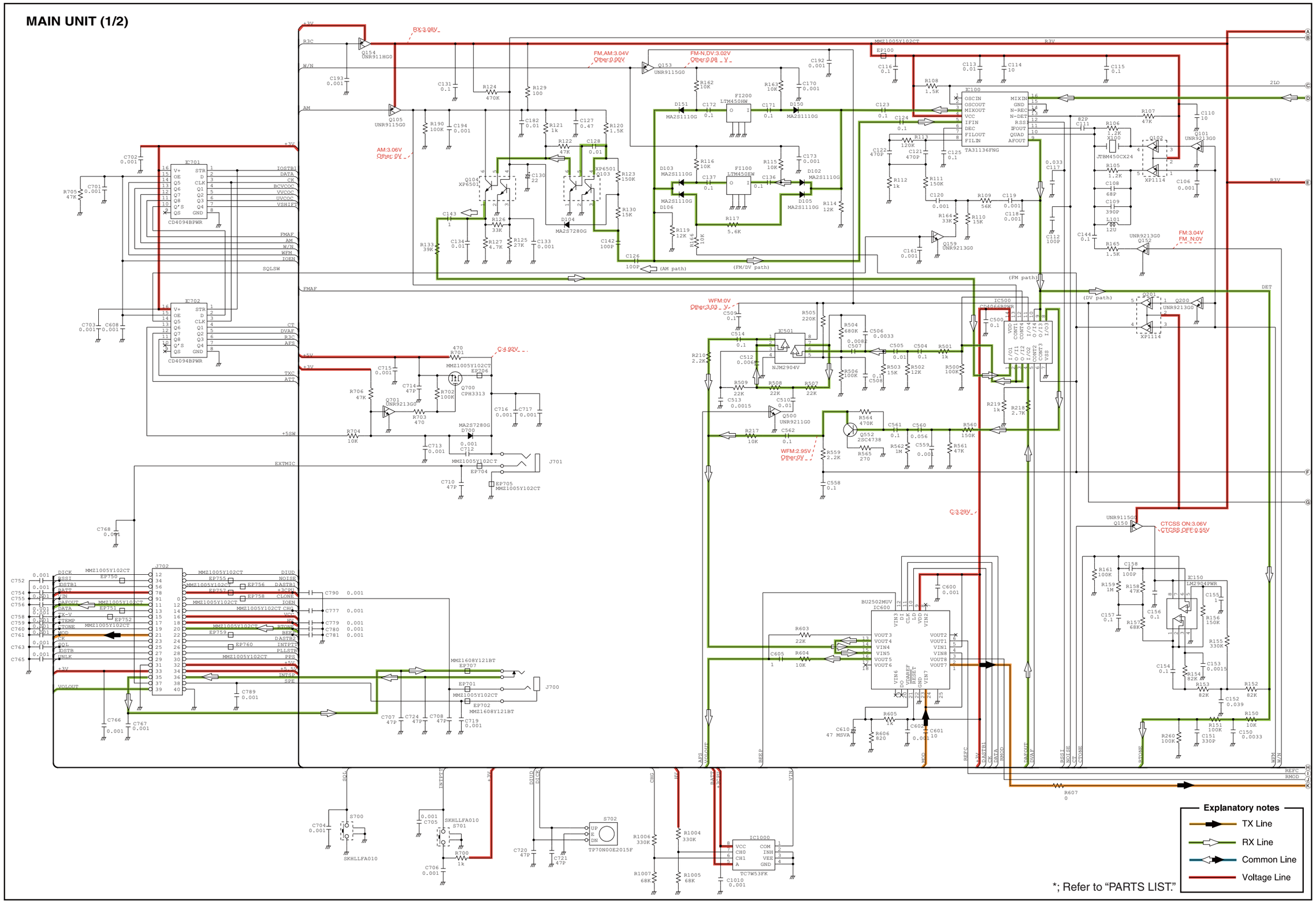
Explanatory notes
TX Line
RX Line
Common Line
Voltage Line
*; Refer to "PARTS LIST."

MAIN UNIT (2/2)

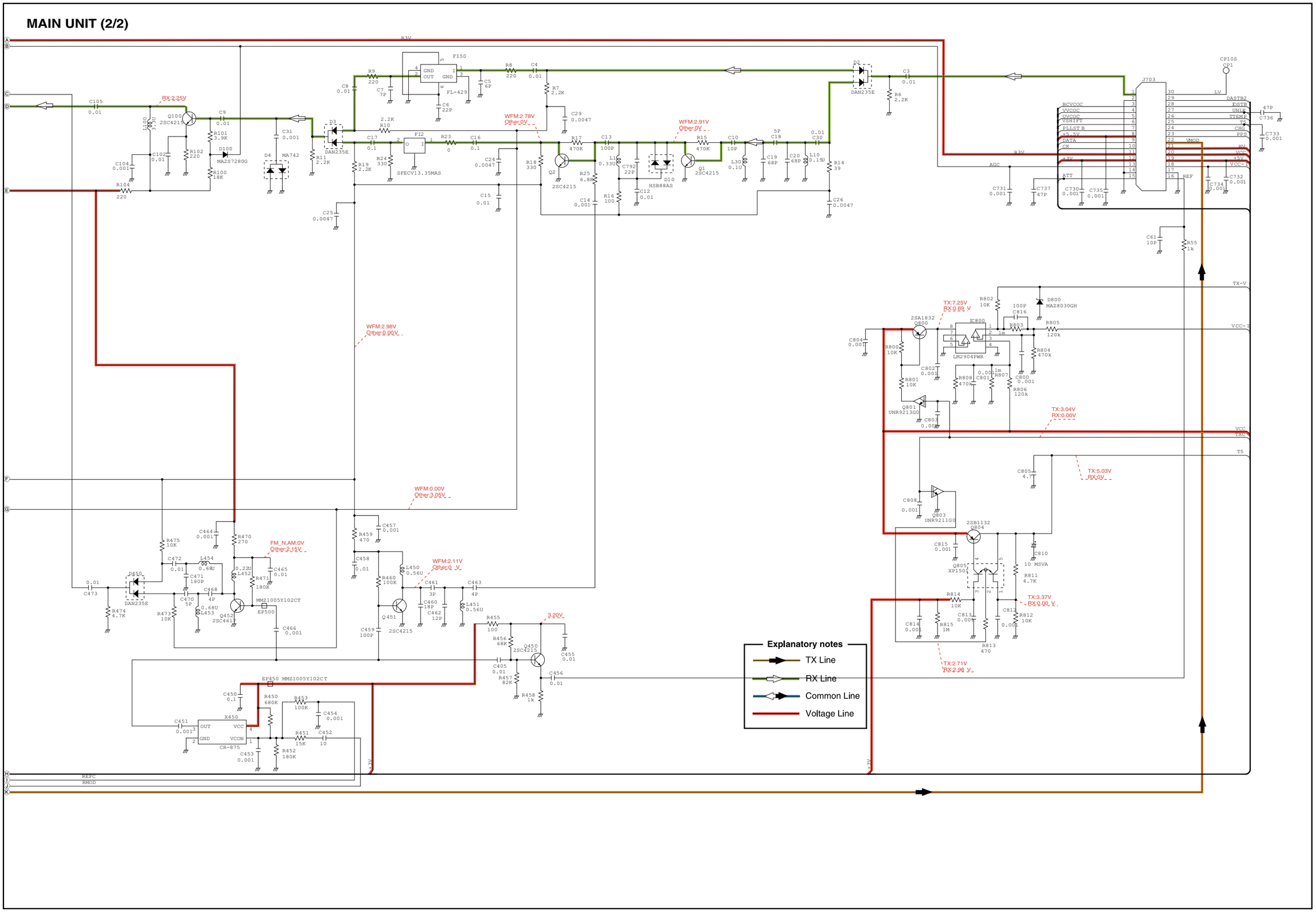

*; Refer to "PARTS LIST."

RF UNIT (1/2)

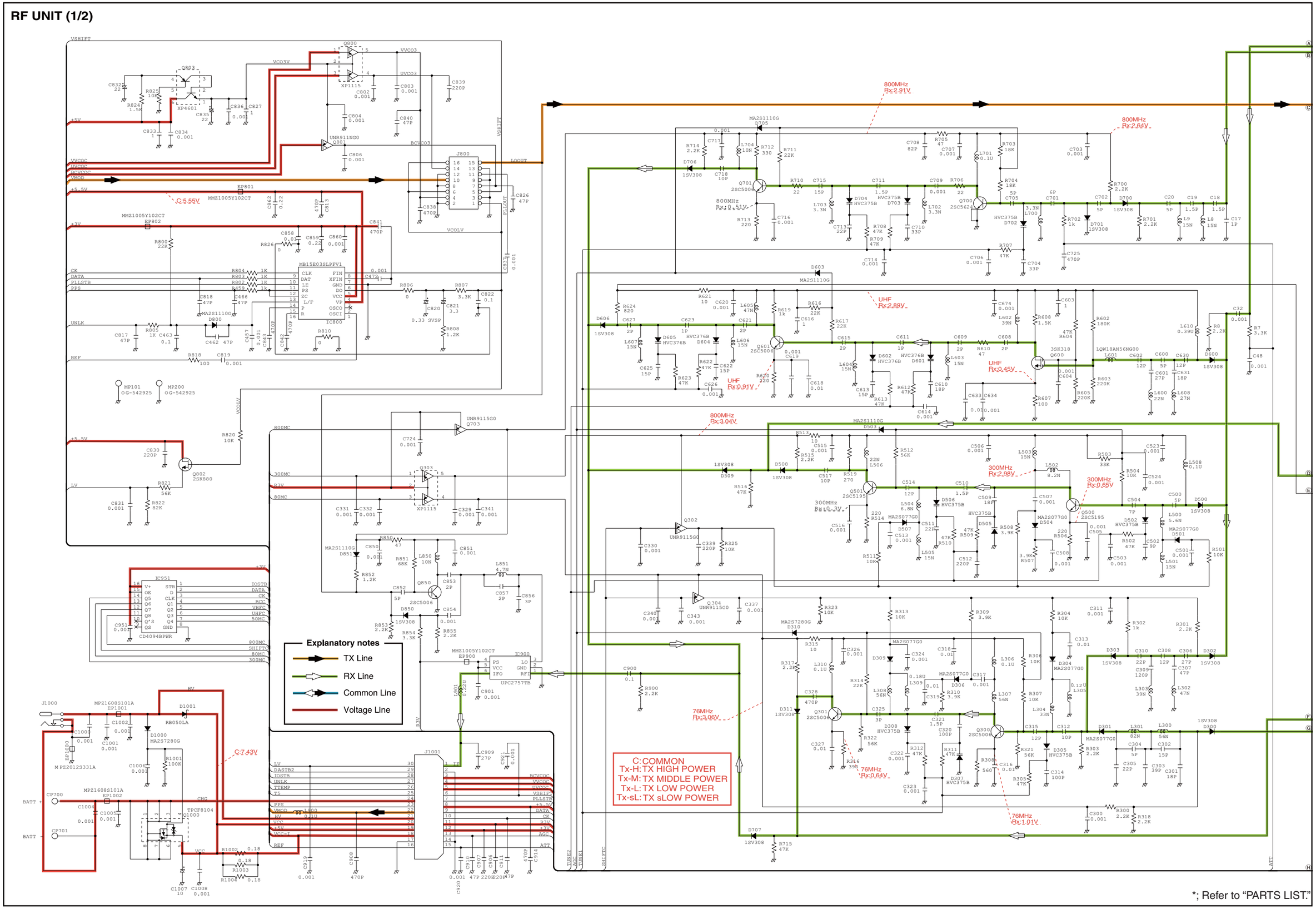
Explanatory notes
TX Line
RX Line
Common Line
Voltage Line
C:COMMON
Tx-H:TX HIGH POWER
Tx-M:TX MIDDLE POWER
Tx-L:TX LOW POWER
Tx-sL:TX sLOW POWER
800MHz Rx:2.91V
800MHz Rx:2.64V
800MHz Rx:0.51V
UHF Rx:2.89V
UHF Rx:0.45V
UHF Rx:0.91V
800MHz Rx:3.04V
300MHz Rx:2.98V
300MHz Rx:0.65V
300MHz Rx:0.3V
76MHz Rx:3.06V
76MHz Rx:0.64V
76MHz Rx:1.01V
C:5.55V
C:7.43V
IC951
CD4094BPWR
IC800
MB15E03SLPFV1
IC900
UPC2757TB
J800
J1000
J1001
Q802
2SK880
Q301
2SC5006
Q300
2SC5006
Q500
2SC5195
Q501
2SC5195
Q700
2SC5624
Q701
2SC5006
Q601
2SC5006
Q850
2SC5006
Q1000
TPCF8104
D1000
MA2S7280G
D1001
RB050LA
MP101
OG-542925
MP200
OG-542925
*; Refer to "PARTS LIST."

RF UNIT (2/2)

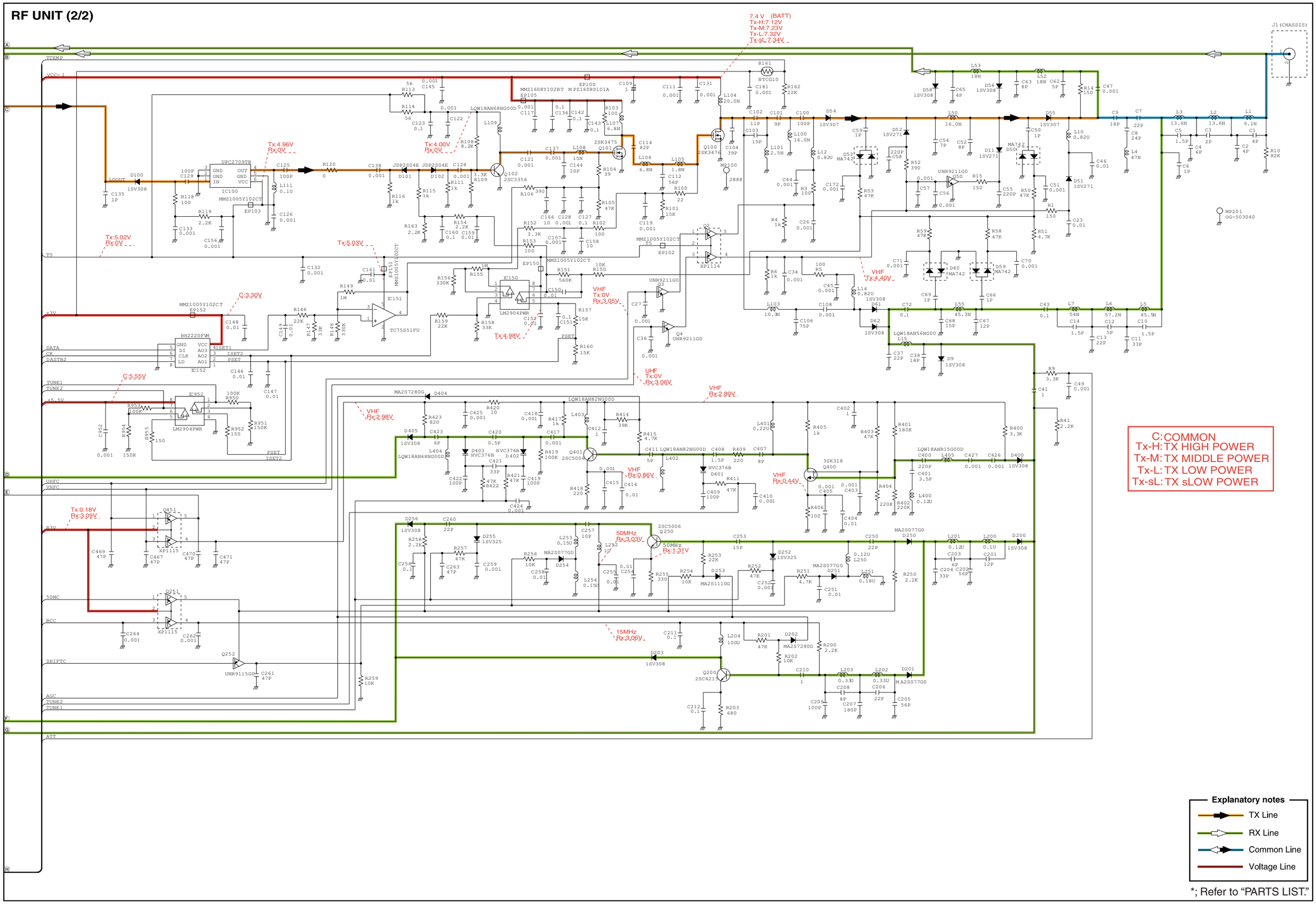

*; Refer to "PARTS LIST."

VCO UNIT

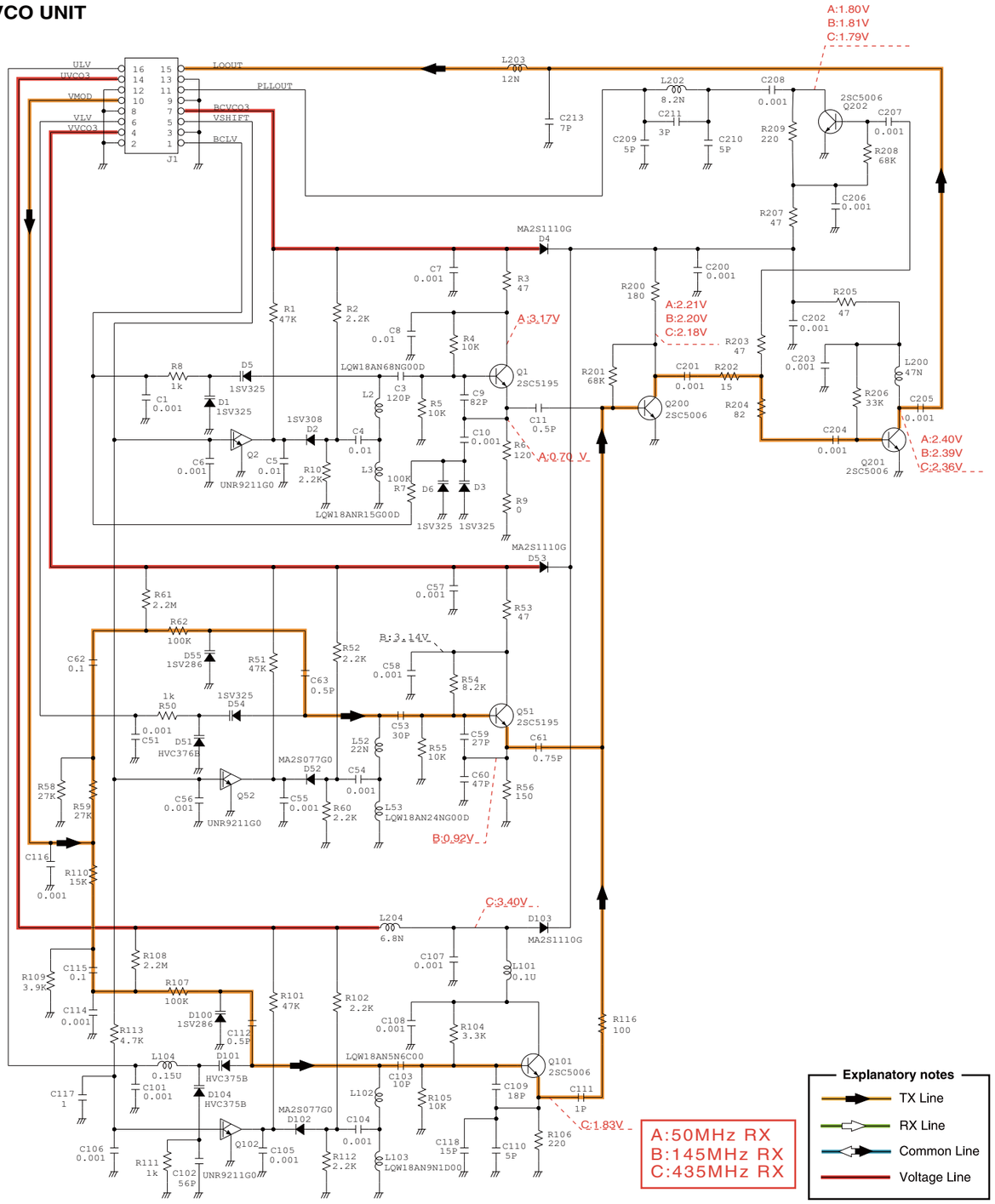

*; Refer to "PARTS LIST."

Icom Inc.

1-1-32, Kamiminami, Hirano-ku, Osaka 547-0003, Japan
Phone : +81 (06) 6793 5302
Fax : +81 (06) 6793 0013
URL : http://www.icom.co.jp/world/index.html

Icom America Inc.

<Corporate Headquarters>
2380 116th Avenue N.E., Bellevue, WA 98004, U.S.A.
Phone : +1 (425) 454-8155 Fax : +1 (425) 454-1509
URL : http://www.icomamerica.com
E-mail : sales@icomamerica.com
<Customer Service>
Phone : +1 (425) 454-7619

Icom Canada

Glenwood Centre #150-6165
Highway 17 Delta, B.C., V4K 5B8, Canada
Phone : +1 (604) 952-4266 Fax : +1 (604) 952-0090
URL : http://www.icomcanada.com
E-mail : info@icomcanada.com

Icom (Australia) Pty. Ltd.

Unit 1 / 103 Garden Road, Clayton VIC 3168 Australia
Phone : +61 (03) 9549-7500 Fax : +61 (03) 9549-7505
URL : http://www.icom.net.au
E-mail : sales@icom.net.au

Icom New Zealand

146A Harris Road, East Tamaki,
Auckland, New Zealand
Phone : +64 (09) 274 4062 Fax : +64 (09) 274 4708
URL : http://www.icom.co.nz
E-mail : inquiries@icom.co.nz

Beijing Icom Ltd.

10C07, Long silver Mansion, No.88, Yong Ding
Road, Haidian District, Beijing, 100039, China
Phone : +86 (010) 5889 5391/5392/5393
Fax : +86 (010) 5889 5395
E-mail : bjicom@bjicom.com
URL : http://www.bjicom.com

Icom (Europe) GmbH

Communication Equipment
Auf der Krautweide 24
65812 Bad Soden am Taunus, Germany
Phone : +49 (6196) 76685-0 Fax : +49 (6196) 76685-50
URL : http://www.icomeurope.com
E-mail : info@icomeurope.com

Icom Spain S.L

Ctra. Rubi, No. 88 Bajos A 08174, Sant Cugat del Valles, Barcelona, Spain
Phone : +34 (93) 590 26 70 Fax : +34 (93) 589 04 46
URL : http://www.icomspain.com
E-mail : icom@icomspain.com

Icom (UK) Ltd.

Blacksole House, The Boulevard, Altira Business Park, Herne Bay, CT6 6GZ, UK
Phone : +44 (01227) 741741 Fax : +44 (01227) 741742
URL : http://www.icomuk.co.uk
E-mail : info@icomuk.co.uk

Icom France s.a.s.

Zac de la Plaine
1 Rue Brindejonc des Moulinais BP 5804
31505 Toulouse Cedex, France
Phone : +33 (5) 61 36 03 03 Fax : +33 (5) 61 36 03 00
URL : http://www.icom-france.com
E-mail : icom@icom-france.com

Asia Icom Inc.

6F No.68, Sec. 1 Cheng-Teh Road, Taipei, Taiwan, R.O.C.
Phone : +886 (02) 2559 1899 Fax : +886 (02) 2559 1874
URL : http://www.asia-icom.com
E-mail : sales@asia-icom.com

Icom Polska

81-850 Sopot, ul. 3 Maja 54, Poland
Phone : +48 (58) 550 7135 Fax : +48 (58) 551 0484
E-mail : icompolska@icompolska.com.pl

Count on us!

Icom Inc.
1-1-32, Kamiminami, Hirano-ku, Osaka 547-0003, Japan

S-14528XZ-C1
© 2009 Icom Inc.